«Buffalo Springfield steam roller »

A l’origine Barber Asphalt Paving of Buffalo, conçut ce type de rouleau compresseur. La photo date des années 1925. Ils avaient pris exemple sur les locomotives forestières Lima Shay. Ces machines routières semblent avoir connu un bon succès.

D’autres versions apparurent mais avec un moteur bicylindre horizontal transmettant le mouvement pas une cascade d’engrenages droits, reprenant la technologie des grues à vapeurs. Les rouleaux compresseurs, à cause de leur va & vient incessant sur la portion de route à damer, avaient des besoins très proches de ceux des grues à vapeur. La chaudière est optimisée pour avoir une forte capacité de vaporisation instantanée, en partie au détriment du rendement.

https://www.practicalmachinist.com/vb/antique-machinery-and-history/steam-road-rollers-296451/

D’autres constructeurs américains s’engouffrèrent dans la brèche mais avec moins de succès commerciaux semble-t-il.

Le constructeur anglais Aveling & Porter, firme née dans les années 1850 développa, dans la même veine, un prototype de rouleau compresseur routier avec sensiblement les mêmes solutions techniques. Leur projet n’a apparemment pas connu de suite industrielle.

Le modéliste Bill Harris a conçu et réalisé un modèle au 1/8ème du steamroller original, modèle qui a connu un certain succès. Ses articles parurent en 1990 dans la revue Live steam sur 7 numéros avec les plans dans le n° de mars. Village Press en fit une réimpression en novembre 1991 sous forme d'un petit opuscule de 50 pages. Ces ouvrages aujourd'hui épuisés se voient de temps à autre sur le marché de l'occasion.

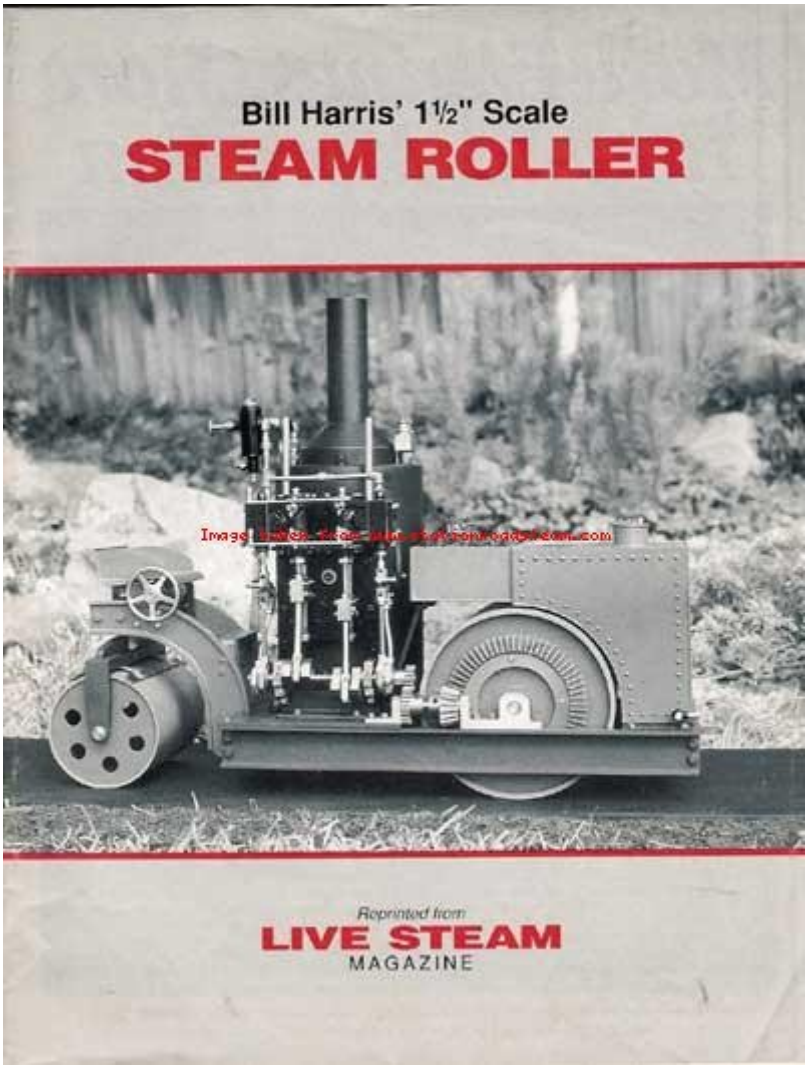

Bien qu'à l'époque des fonderies aient été produite la totalité des pièces pouvaient être fabriquées par mécano soudure et usinage.

Quelques images issues des sites *stationroadsteam* et *homeshopmachinist*.

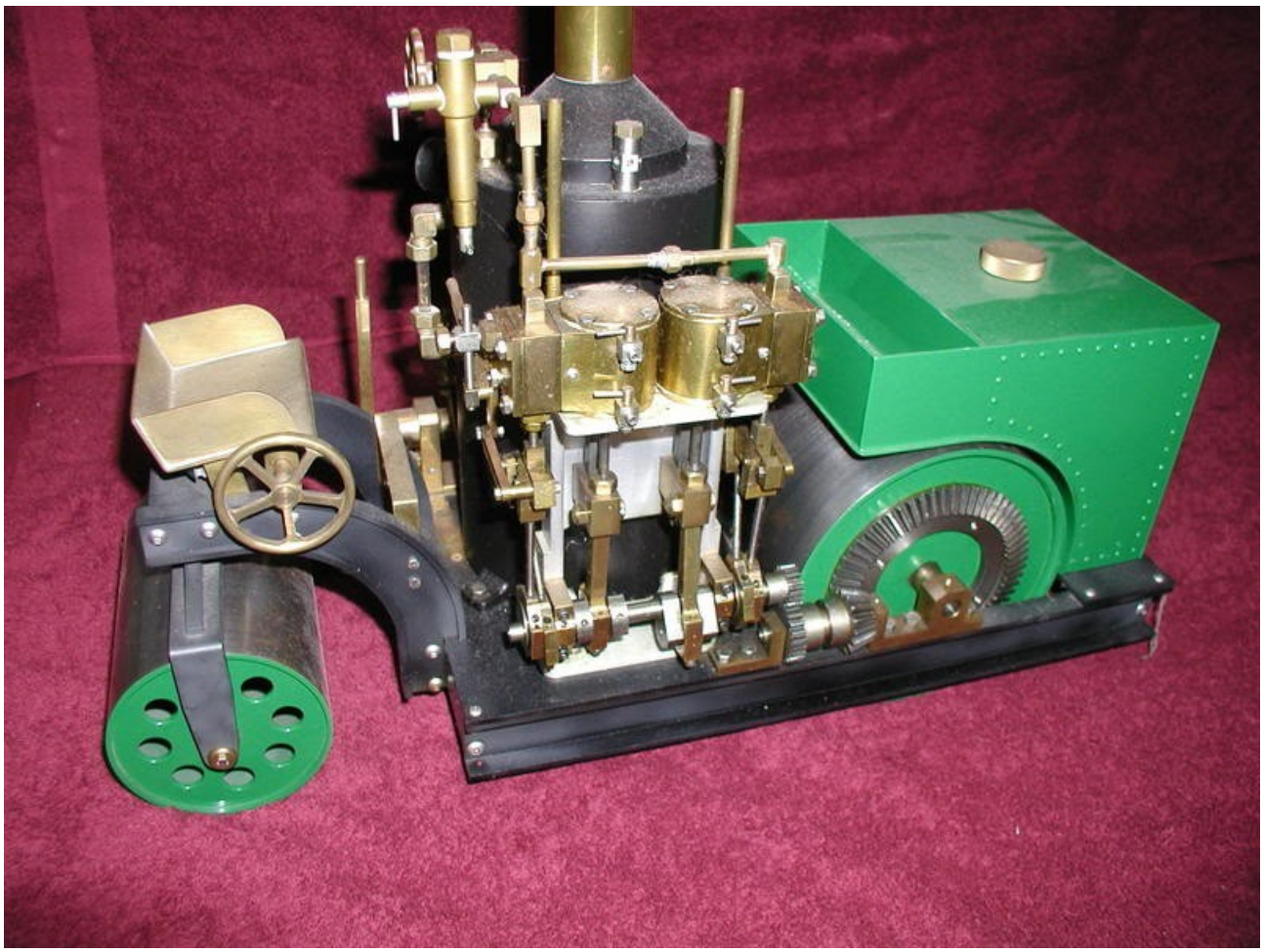

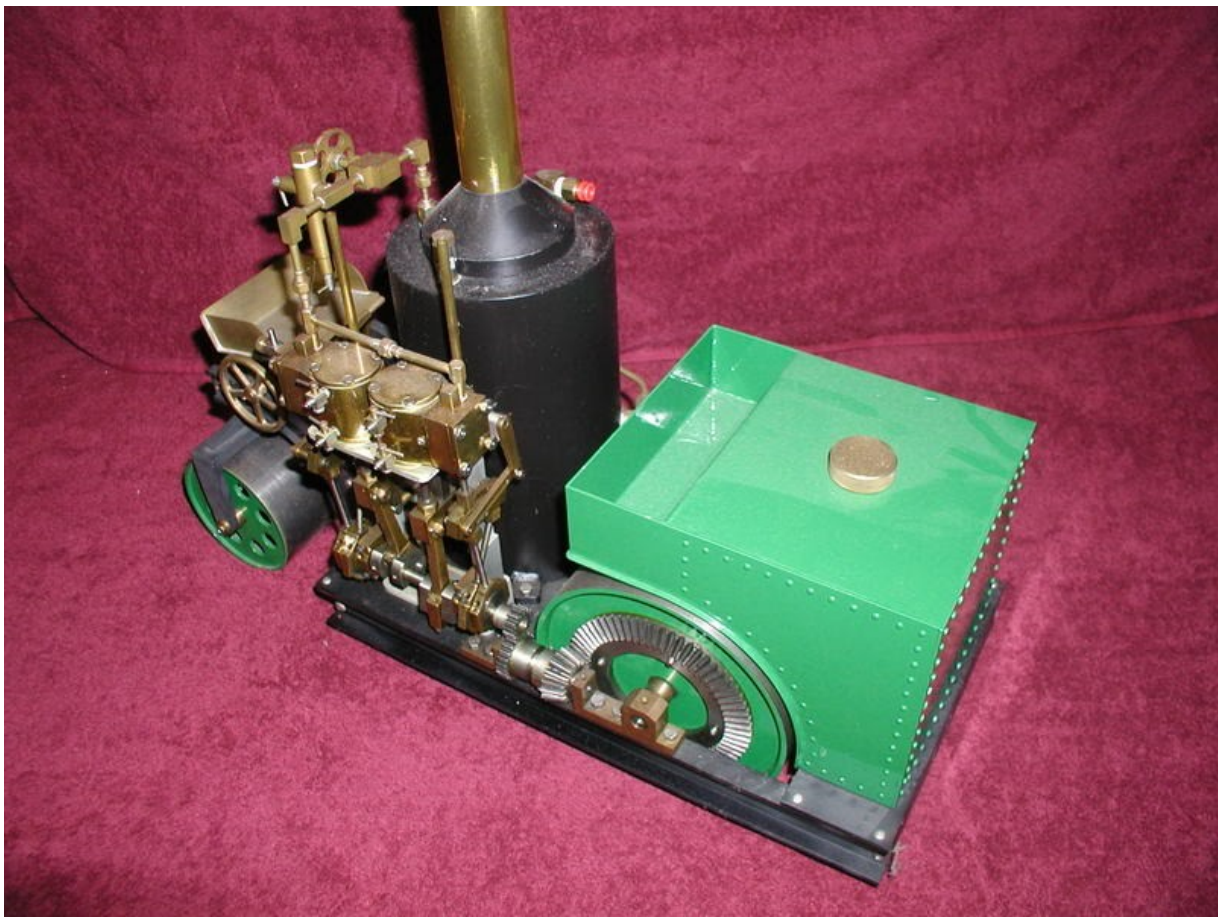

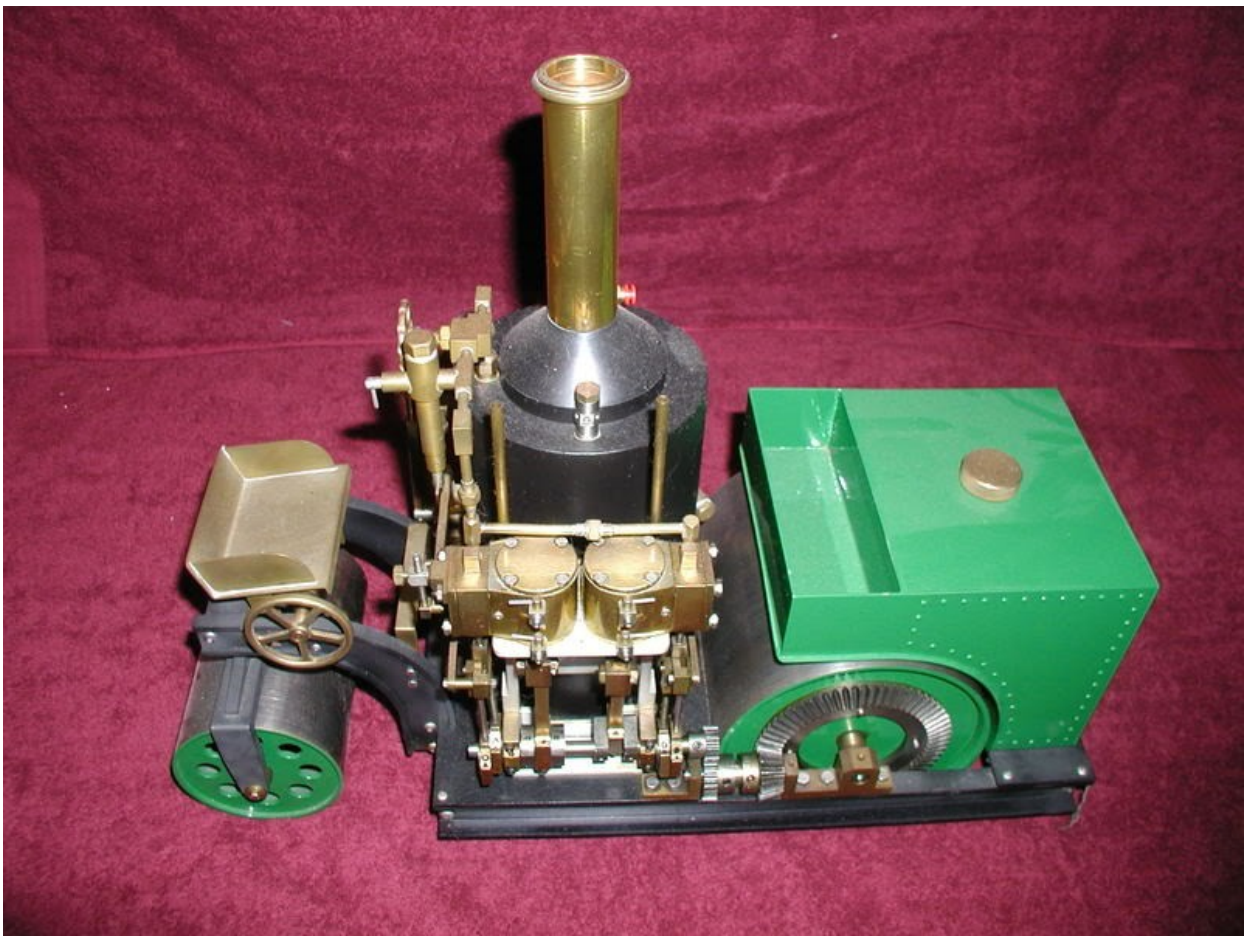

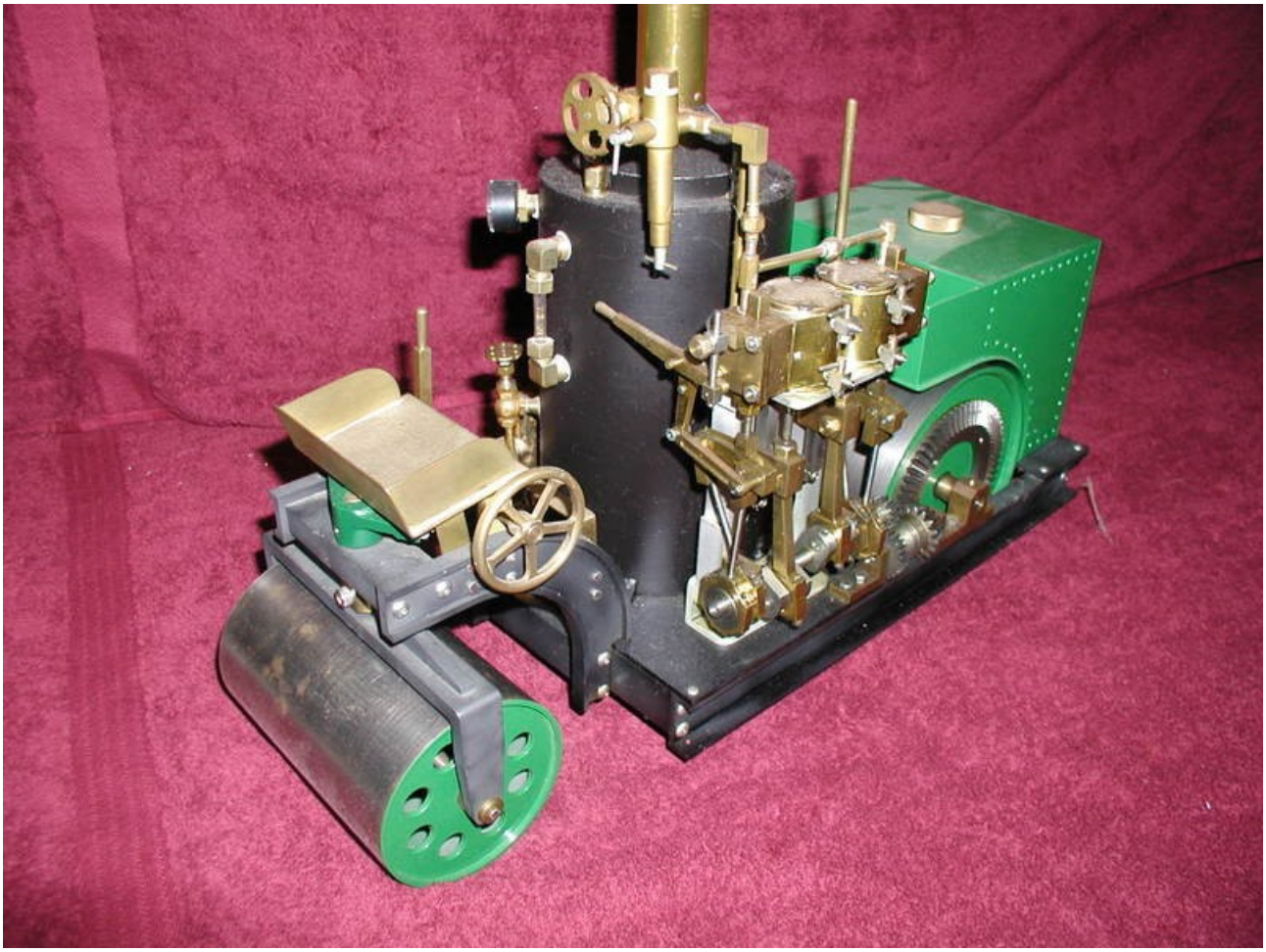

Bill Harris 1½" Scale
STEAM ROLLER

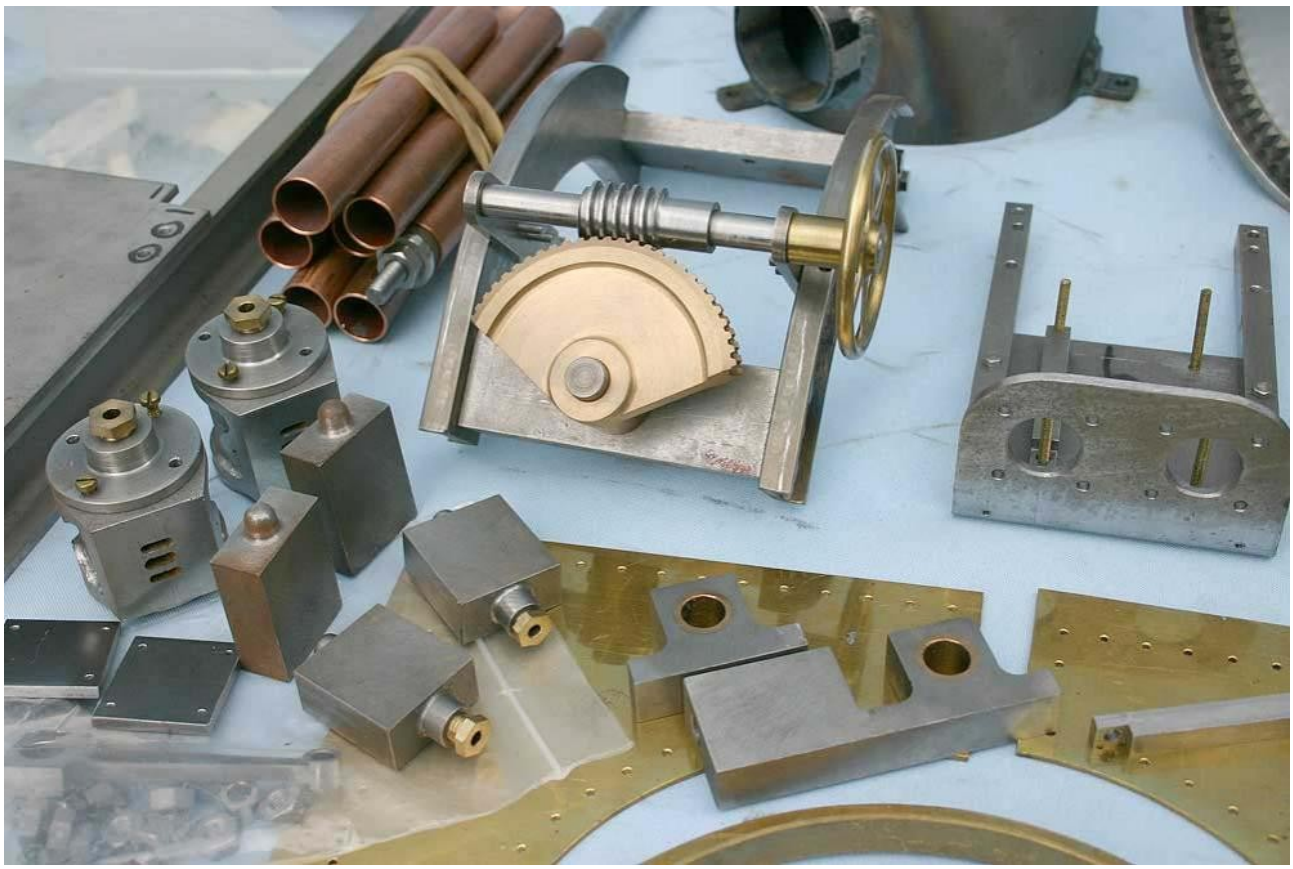

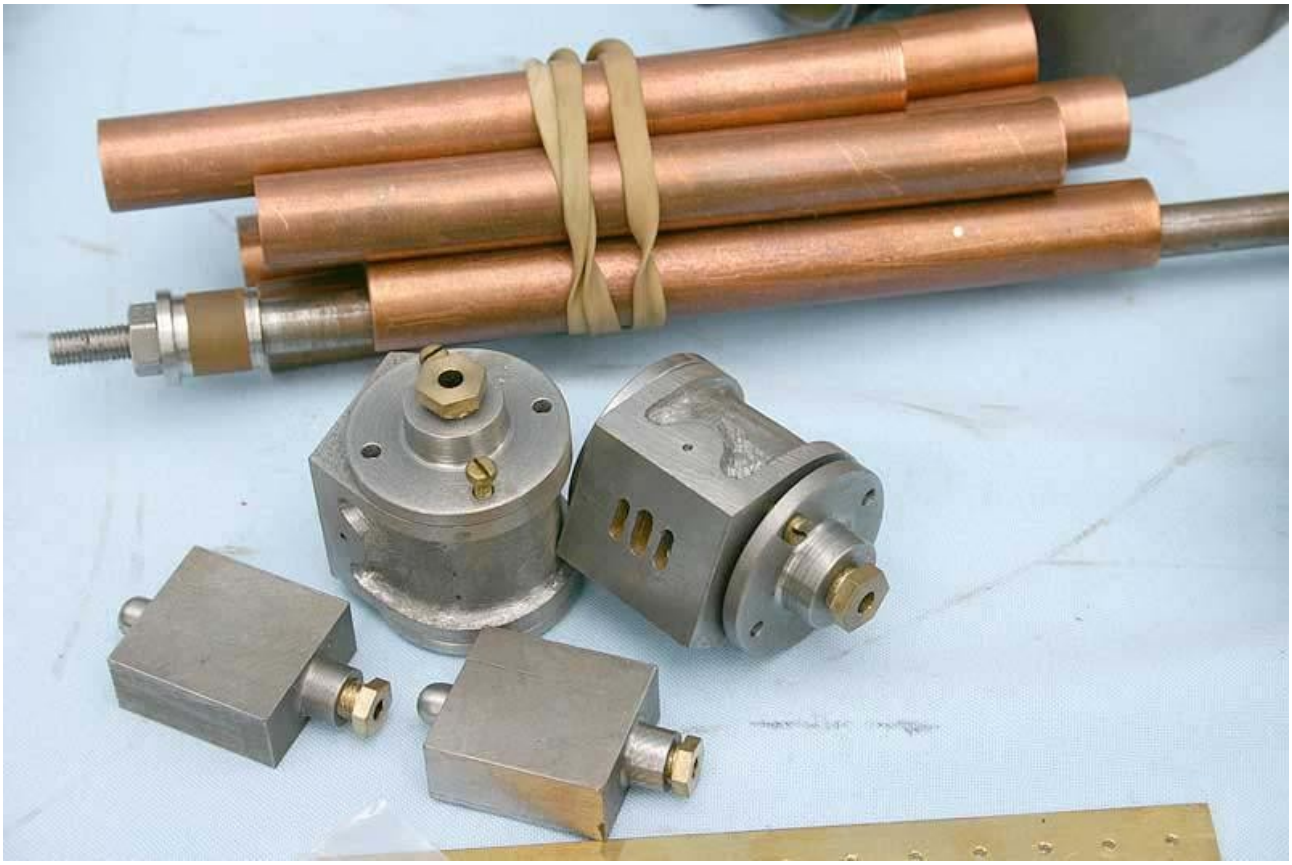

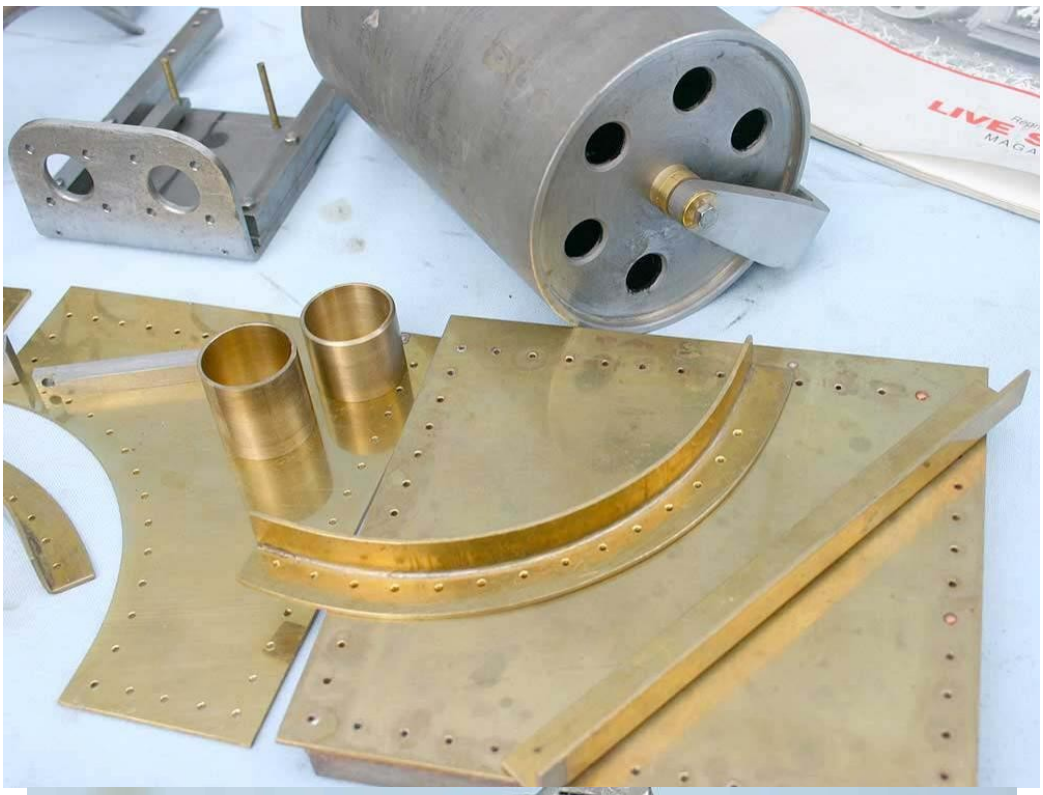

https://www.stationroadsteam.com/1-14-inch-scale-buffalo-steam-roller-stock-code-7755/fullscreen/14/

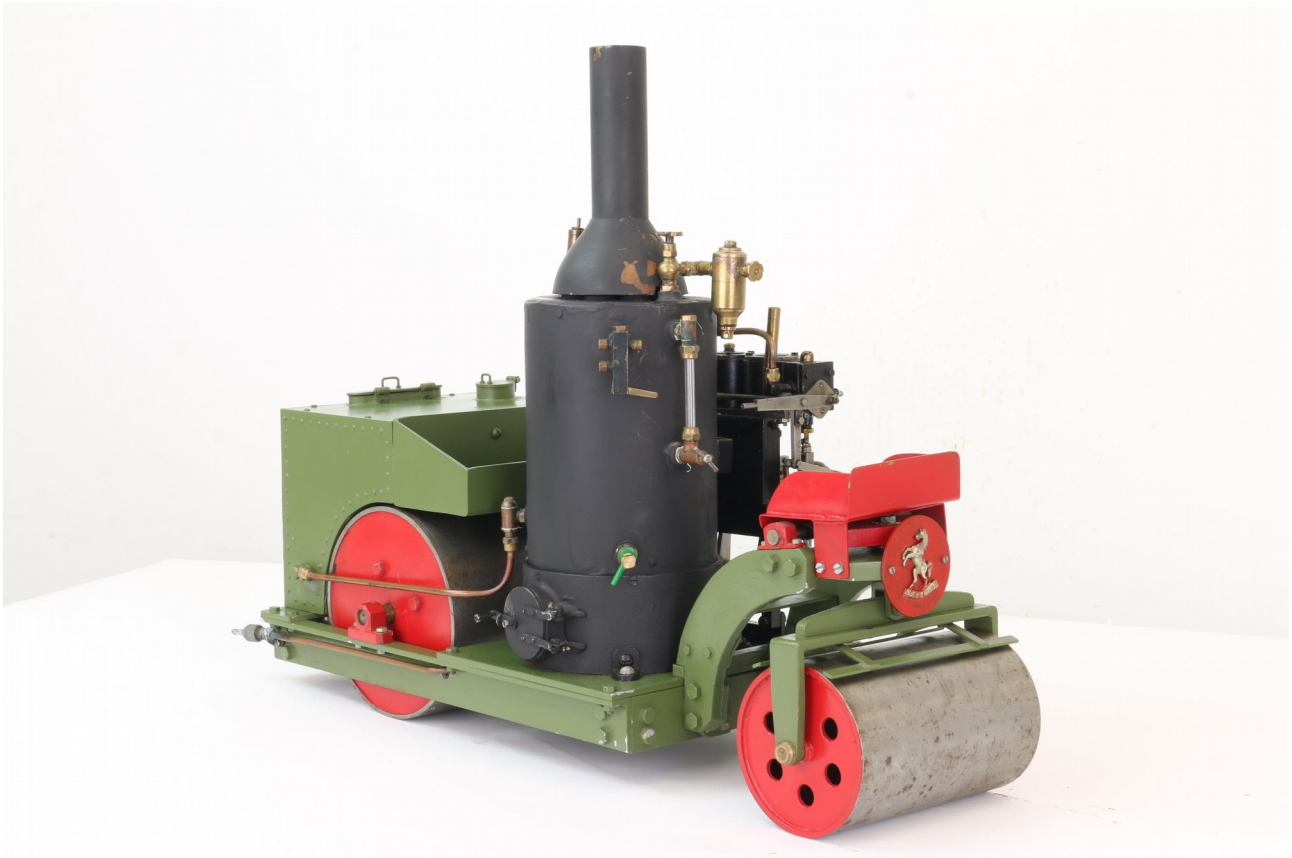

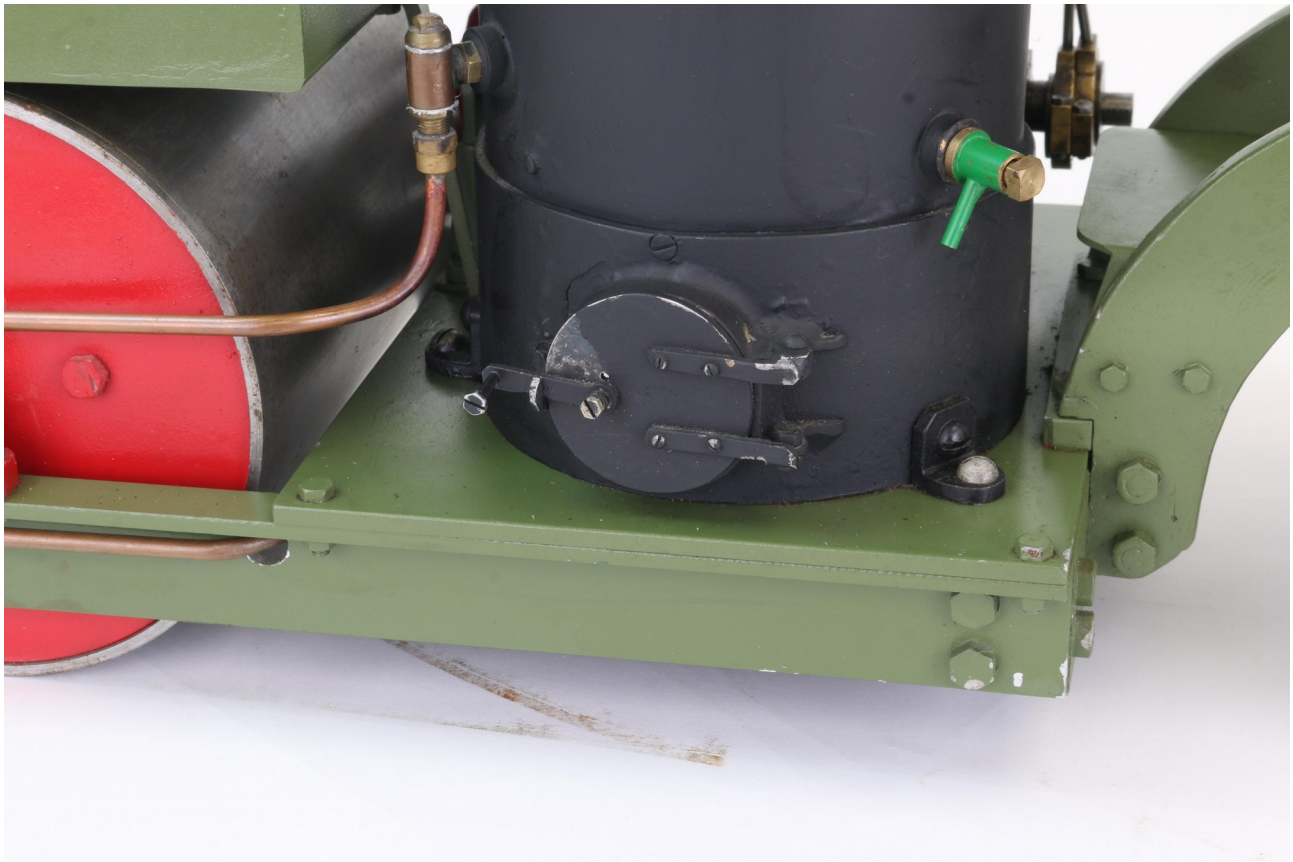

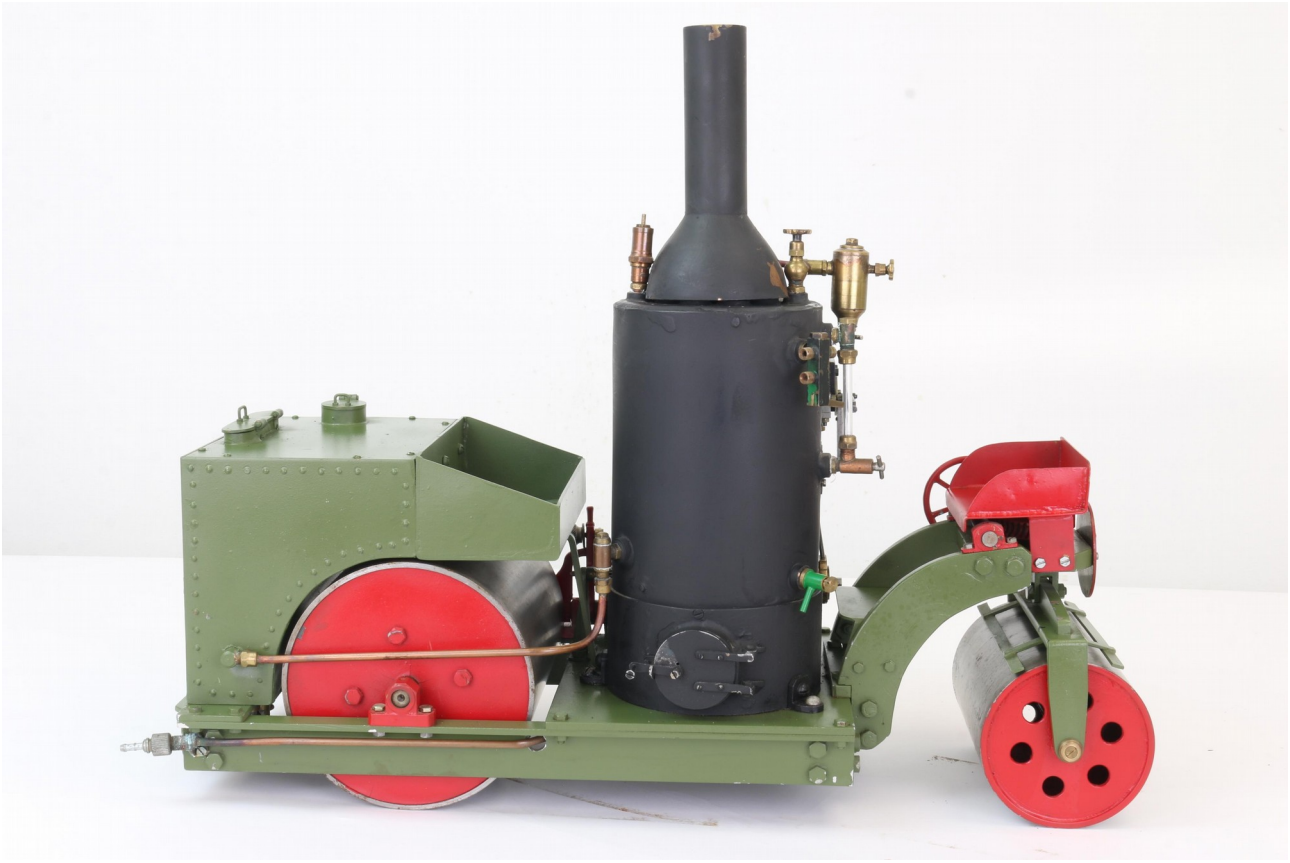

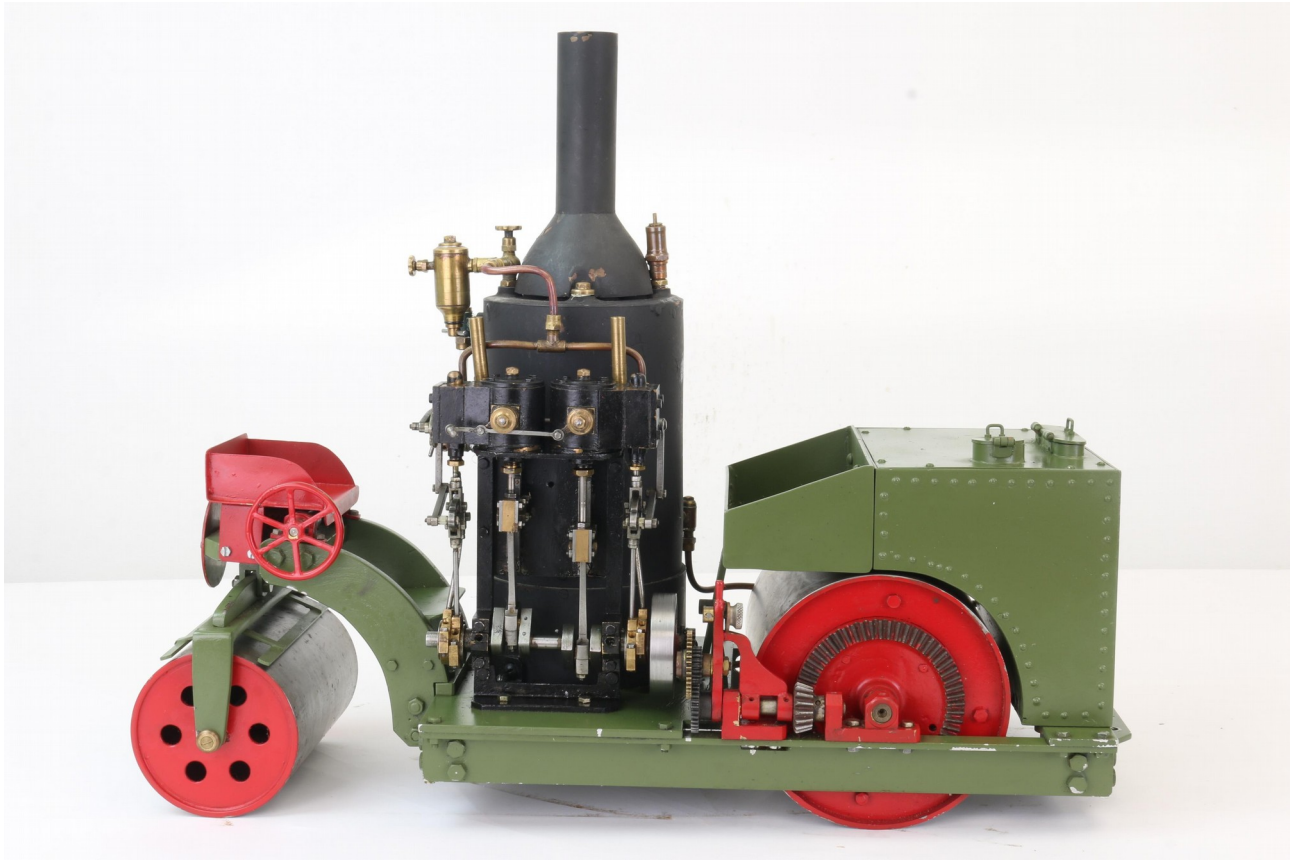

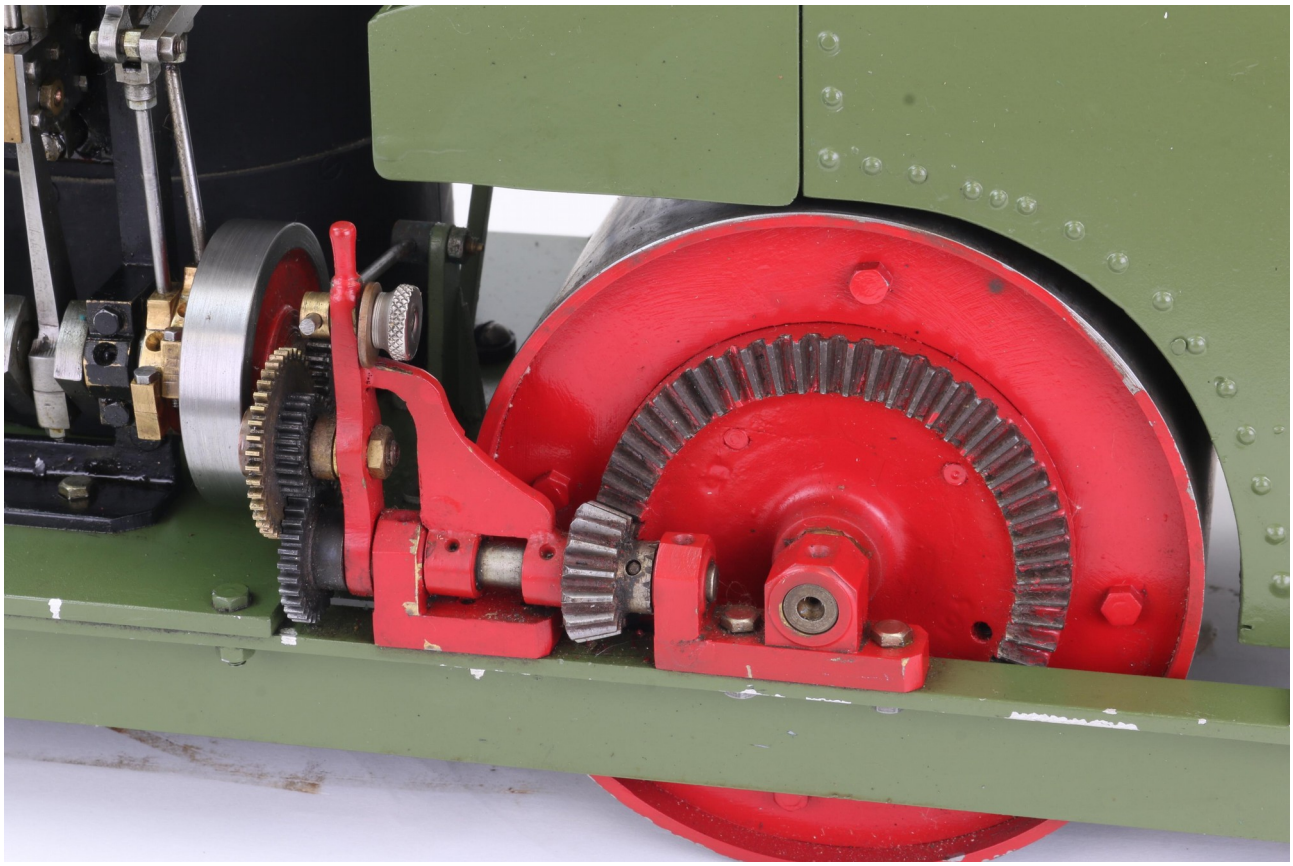

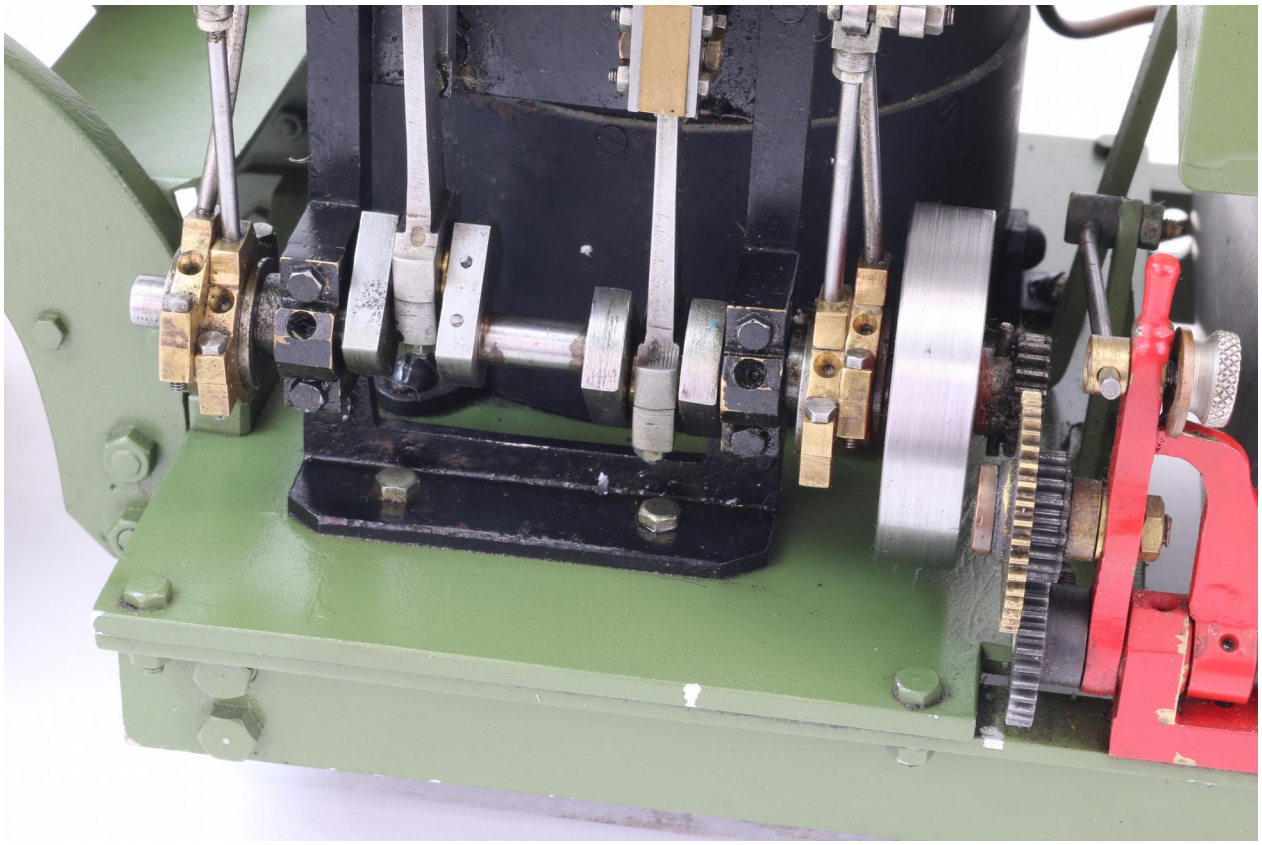

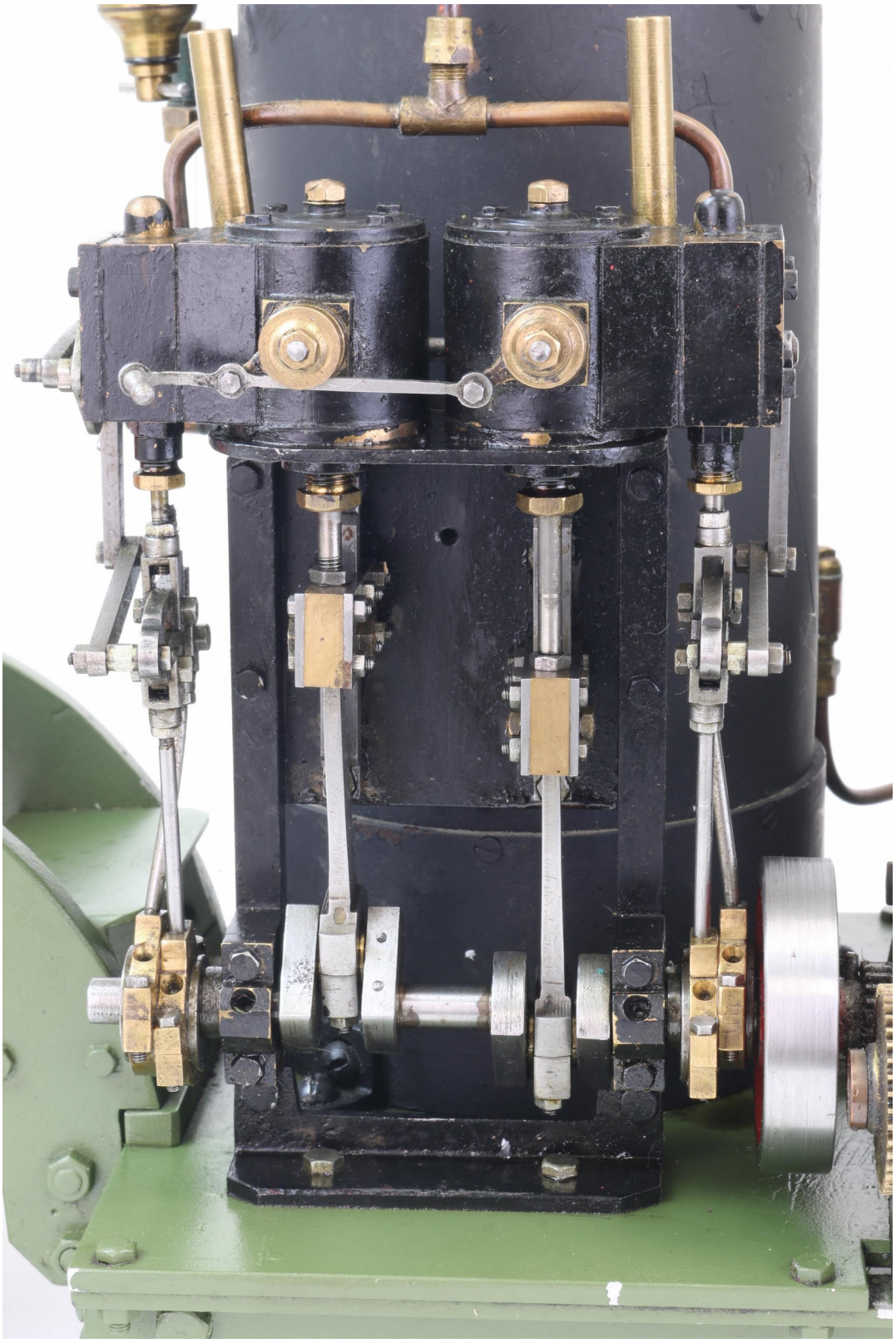

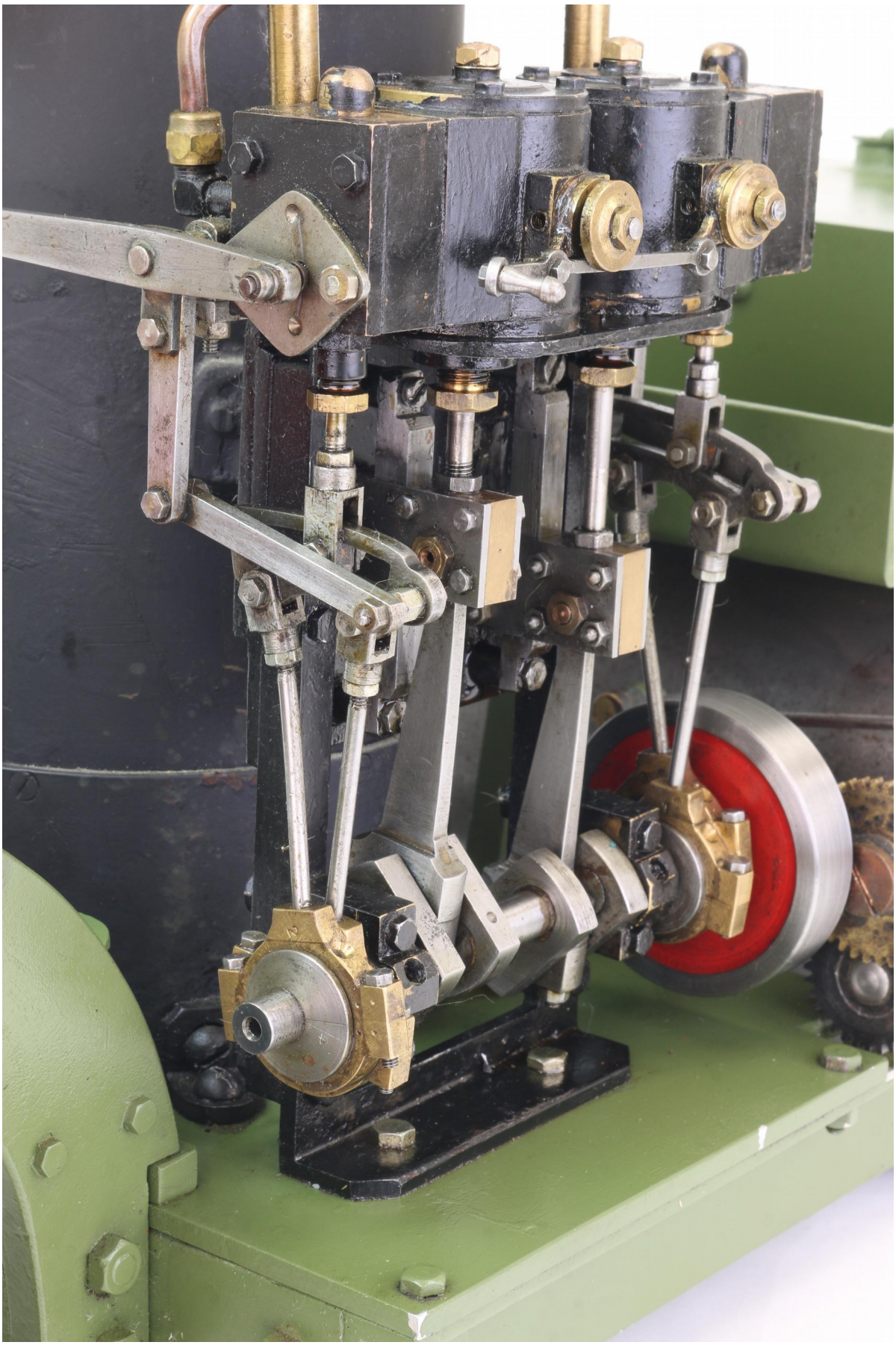

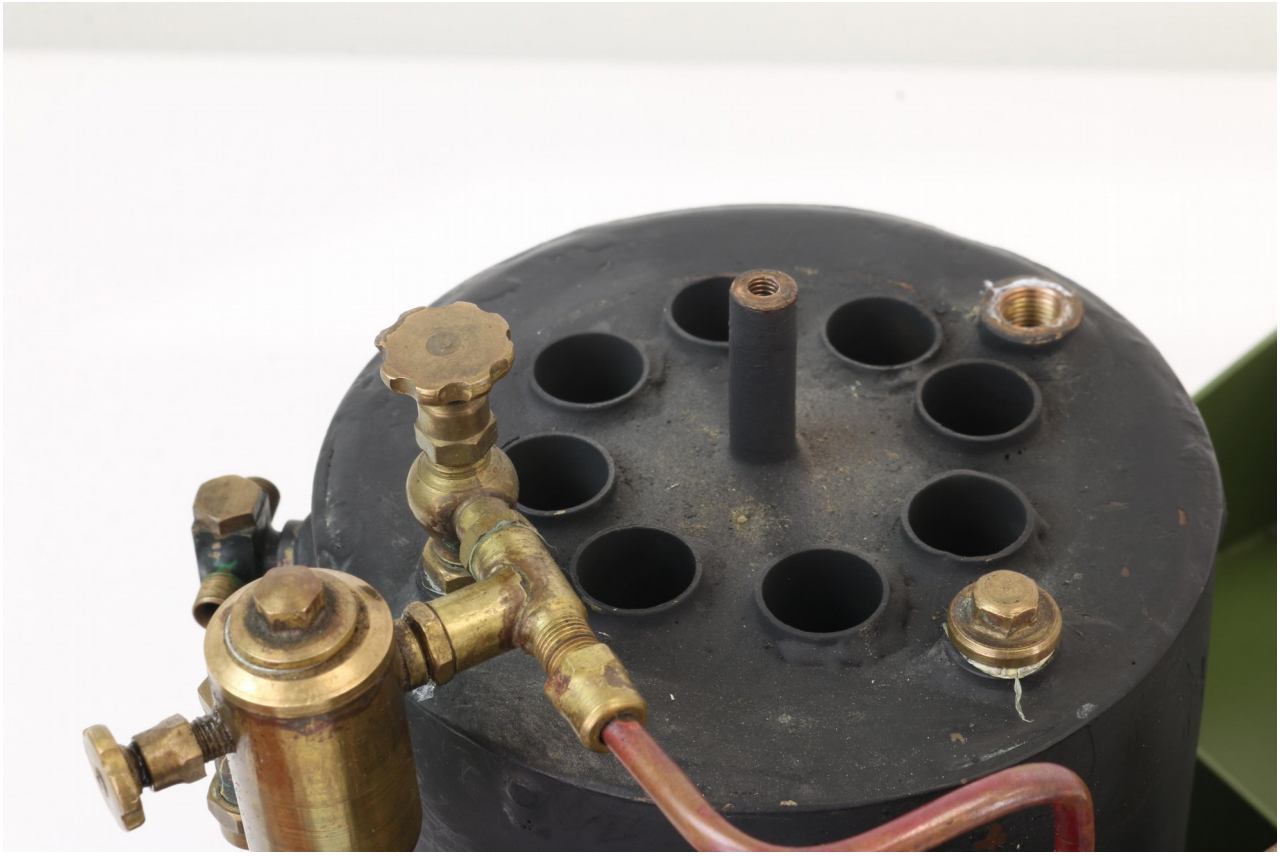

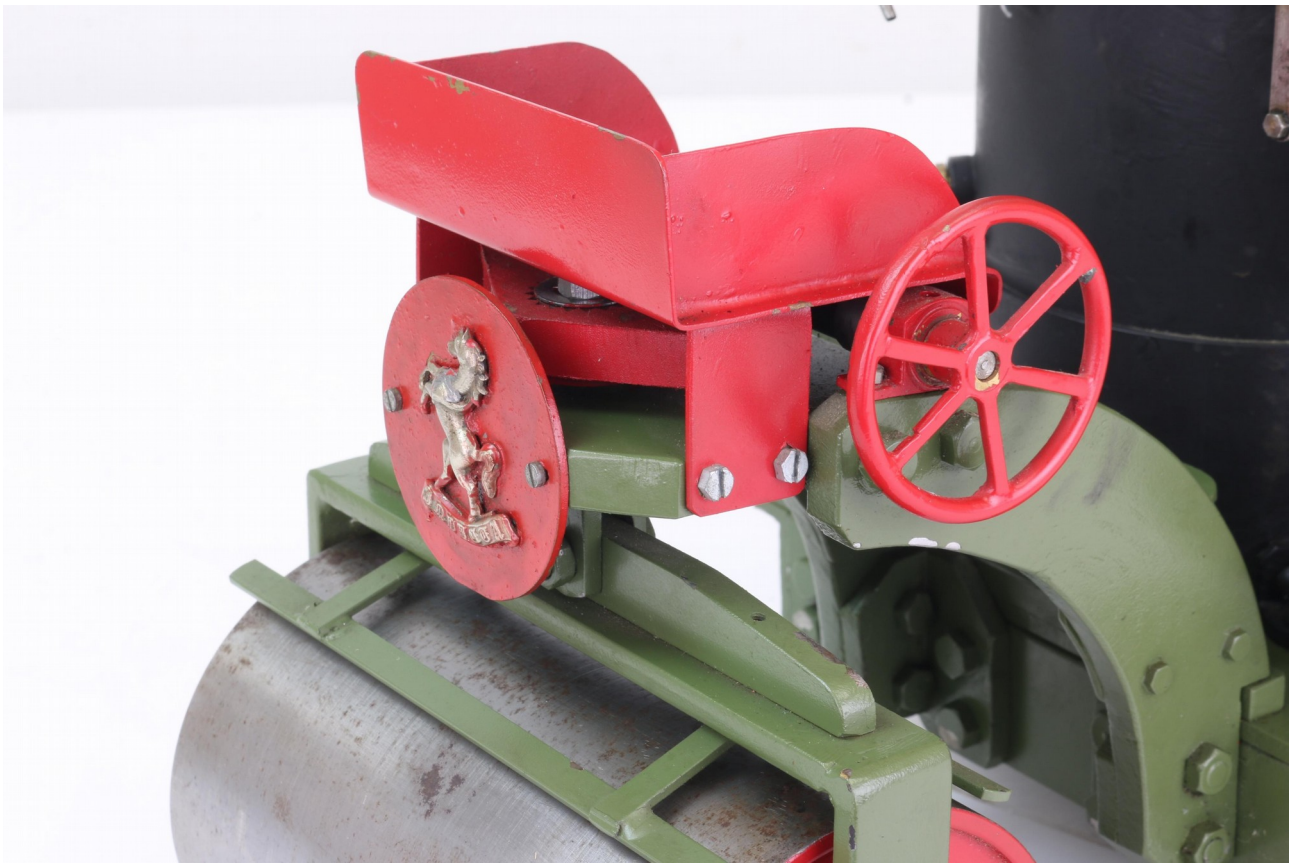

Julius de Waal nous offre les plans en métrique dans une version très proche du modèle de Bill Harris

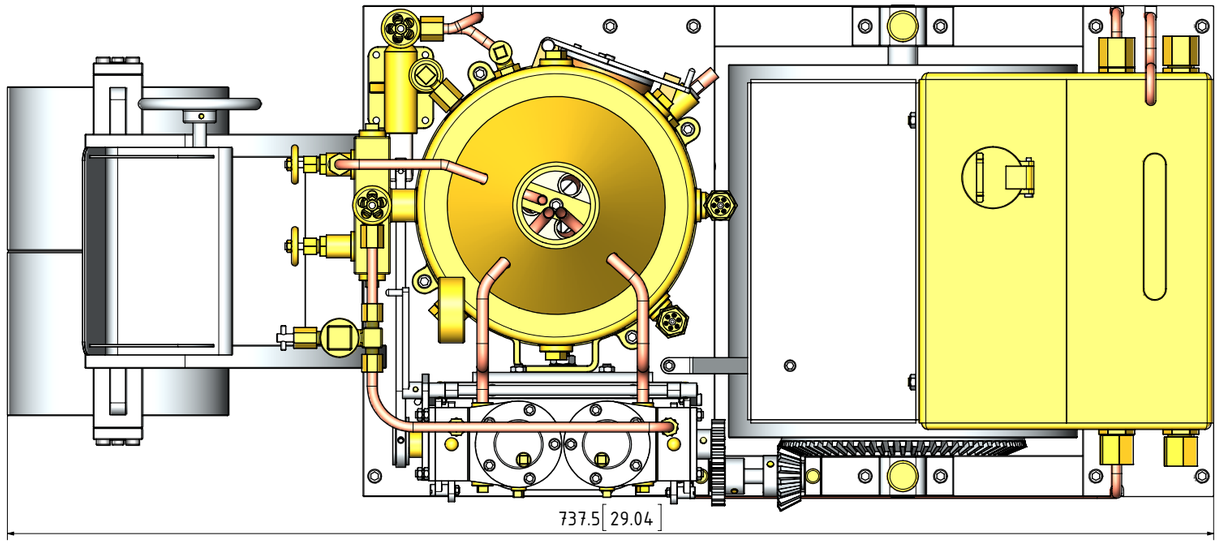

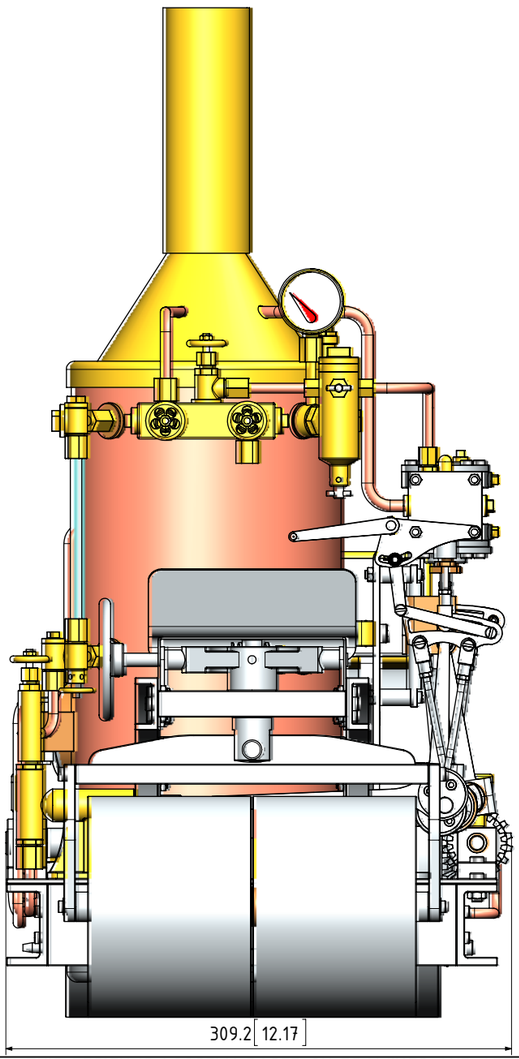

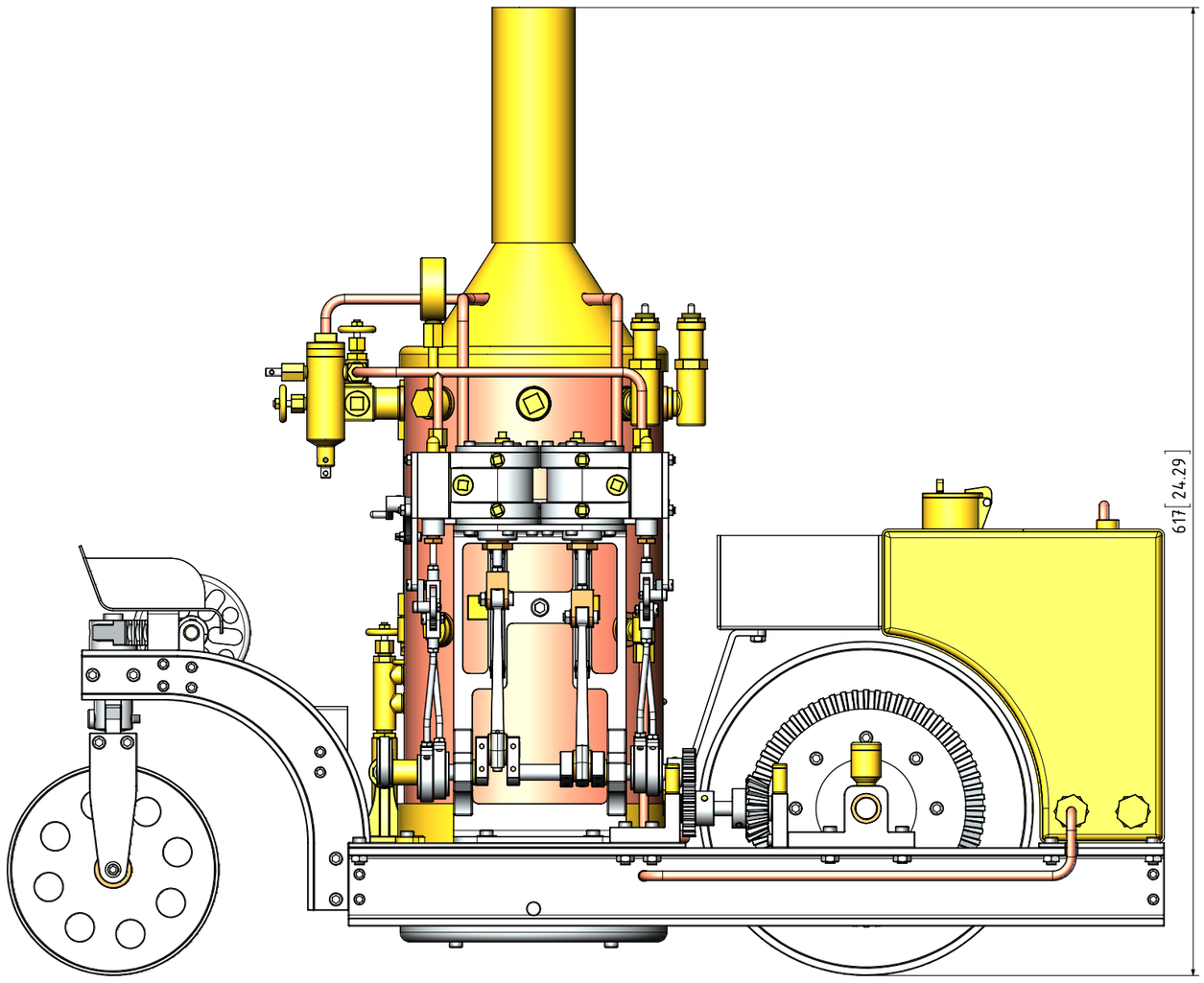

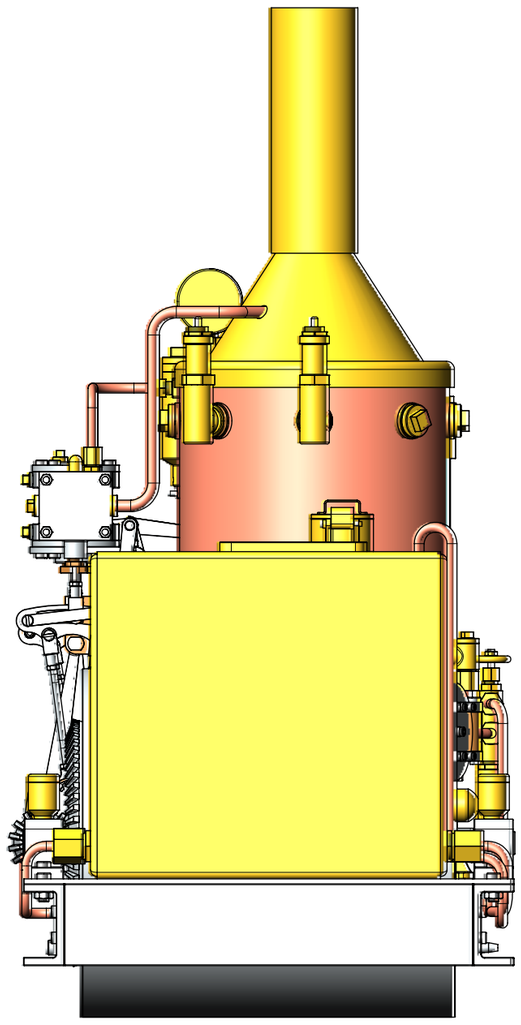

NOTES: THIS DESIGN IS LOOSELY BASED ON DRAWINGS AND ARTICLE WHICH I FOUND A LONG TIME AGO IN ONE OF THE "MODELBOUWER" MAGAZINES 4(2002) ALSO FOUND SOME PRINTS AND PICTURES ON THE INTERNET. THE ORIGINAL DESIGN WAS BY Mr BILL HARRIS. (USA)

TITLE

A MODEL OF A COAL FIRED TANDEM STEAM ROLLER (ALSO CALLED "COFFEEPOT")

DRAWING CONTENTS

GENERAL ARRANGEMENT

PROJECT No 08-12-00

JDW DRAUGHTING SERVICES

J.A.M. DE WAAL. 12 BRIGHTWELL STREET PAPAKURA 2110. NEW ZEALAND. PHONE: 0064 09 2988815. MOB: 0211791000 E-MAIL: dewaal@xtra.co.nz.

PROJECTION JDWDS

DATE OCTOBER 2018

SHEET: 01 OF 10

MODEL SCALE: 1:1

DWG SCALE: NTS @A3 OR AS SHOWN

Copyright © J.A.M. DE WAAL PAPAKURA NZ

A3 No: 08-12-00-SHT01

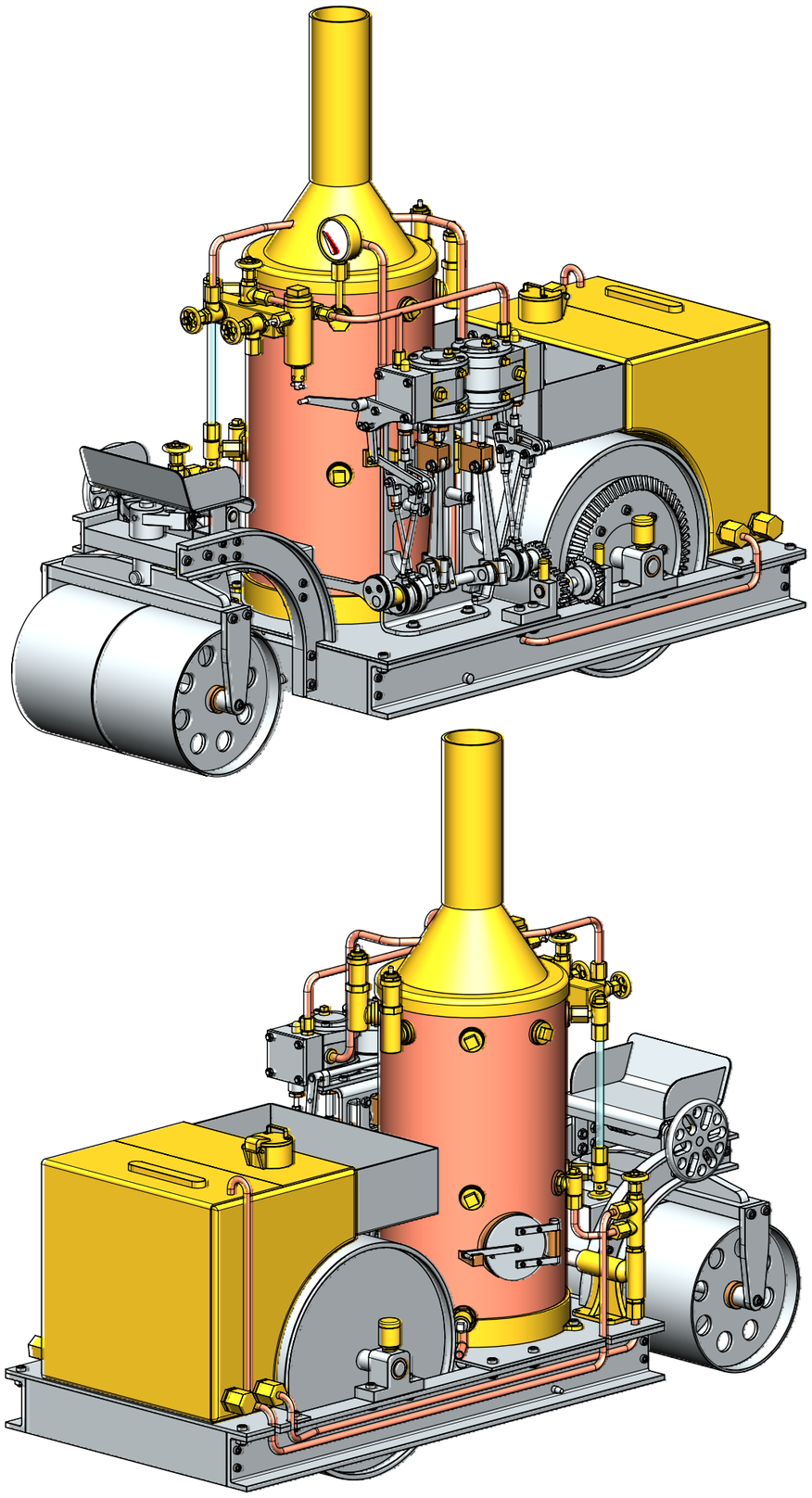

QTY.	PART NUMBER
1	COFFEEPOT-1-01-UNDER FRAME
1	COFFEEPOT-1-02-R-H MAIN BEARING
1	COFFEEPOT-1-03-L-H MAIN BEARING
1	COFFEEPOT-1-04-GEAR SHAFT SUPPORT BRACKET
1	COFFEEPOT-1-05-DRIVERS SEAT
1	COFFEEPOT-1-06-DRIVERS STEP
1	COFFEEPOT-1-07-WATERTANK
4	COFFEEPOT-1-08-WATERTANK NIPPLE+NUT
1	COFFEEPOT-1-09-WATERTANK FILLER CAP
2	COFFEEPOT-1-10-WATERTANK STOP NUT
2	COFFEEPOT-1-11-WATERTANK PIPE NUT
1	COFFEEPOT-1-12-COAL BUNKER
1	COFFEEPOT-1-13-COAL BUNKER SUPPORT LEG
1	COFFEEPOT-1-14-WATER HAND PUMP HOUSING
1	COFFEEPOT-1-15-WATER HAND PUMP PISTON
1	COFFEEPOT-1-16-WATER HAND PUMP HANDLE
2	COFFEEPOT-1-17-WATER HAND PUMP LINK
1	COFFEEPOT-1-18-ASHPAN
1	COFFEEPOT-1-19-MECH. WATER PUMP HOUSING
1	COFFEEPOT-1-20-WATER BYPASS VALVE
1	COFFEEPOT-1-21-WATER HAND PUMP PIPE-1
1	COFFEEPOT-1-22-MECH PUMP WATER SUPPLY PIPE
2	COFFEEPOT-1-23-STEERING SPINDLE BEARING BRACKET
1	COFFEEPOT-2-01-BOILER SHELL
1	COFFEEPOT-2-02-FIRE BOX DOOR
12	COFFEEPOT-2-03-BOILER NIPPLE
2	COFFEEPOT-2-03-BOILER NIPPLE
21	COFFEEPOT-2-04-BOILER TUBE
1	COFFEEPOT-2-05-BLOWN DOWN VALVE
2	COFFEEPOT-2-06-NON RETURN VALVE
2	COFFEEPOT-2-07-SAFETY VALVE
1	COFFEEPOT-2-08-WATER LEVEL GAUGE
1	COFFEEPOT-2-09--PRESSURE GAUGE
1	COFFEEPOT-2-10-STEAM SUPPLY MANIFOLD
3	COFFEEPOT-2-11-STEAM SUPPLY VALVE
1	COFFEEPOT-2-12-BYPASS PIPE-1
1	COFFEEPOT-2-13-BYPASS PIPE-2
1	COFFEEPOT-2-14-HAND PUMP DELIVERY PIPE
5	COFFEEPOT-2-15-BOILER PLUG
1	COFFEEPOT-2-16-BLOWER PIPE
1	COFFEEPOT-2-17-LUBRICATOR
1	COFFEEPOT-3-01-ENGINE FRAME WORK
2	COFFEEPOT-3-02-CROSSHEAD GUIDE
2	COFFEEPOT-3-03-CRANK SHAFT BEARING
1	COFFEEPOT-3-04-CYLINDER+VALVE CHEST
1	COFFEEPOT-3-04-CYLINDER+VALVE CHEST
2	COFFEEPOT-3-05-CYLINDER TOP COVER
2	COFFEEPOT-3-06-CYLINDER BOTTOM COVER
6	COFFEEPOT-3-07-CYLINDER DRAIN VALVE PLUG
2	COFFEEPOT-3-08-CYLINDER EXHAUST PLUG
2	COFFEEPOT-3-10-VALVE CHEST STEAM INLET NIPPLE
1	COFFEEPOT-3-11-REVERSING SHAFT BRACKET
1	COFFEEPOT-3-12-LH-CYLINDER STEAM EXHAUST PIPE
1	COFFEEPOT-3-13-RH-CYLINDER STEAM EXHAUST PIPE
1	COFFEEPOT-3-14-CYLINDERS STEM SUPPLY PIPE-1
1	COFFEEPOT-3-15-REVERSING HANDLE GUIDE PLATE
1	COFFEEPOT-4-01-STEERING ROLLER FRAME
2	COFFEEPOT-4-02-STEERING ROLLER DRUM
1	COFFEEPOT-4-03-STEERING SHAFT
1	COFFEEPOT-4-04-STEERING WHEEL+SPINDLE
1	COFFEEPOT-4-05-FRONT ROLLER DRUM+SHAFT
1	COFFEEPOT-4-06-INTERMEDIATE GEAR SHAFT
1	COFFEEPOT-4-07-CRANKSHAFT
2	COFFEEPOT-4-08-PISTON+CROSSHEAD
2	COFFEEPOT-4-09-CON-ROD
2	COFFEEPOT-4-10-ECCENTRIC SHEAVE
2	COFFEEPOT-4-10-ECCENTRIC SHEAVE
2	COFFEEPOT-4-11-SLIDE VALVE+ SPINDLE
2	COFFEEPOT-4-12-ECCENTRIC STRAP
2	COFFEEPOT-4-12-ECCENTRIC STRAP
2	COFFEEPOT-4-13-EXPANSION LINK
2	COFFEEPOT-4-14-EXPANSION LINK DIE BLOCK
1	COFFEEPOT-4-15-REVERSER LEVER+SHAFT
2	COFFEEPOT-4-16-REVERSER LEVER LINK
1	COFFEEPOT-4-17-MECH WATER PUMP PISTON
1	COFFEEPOT-4-18-MECH. WTR. PMP.ECCENTRIC SHEAVE
1	COFFEEPOT-4-19-MECH. WTR. PMP.ECCENTRIC STRAP

QTY.	PART NUMBER
10	COFFEEPOT-M3 NUT
10	COFFEEPOT-M3 WASHER
4	COFFEEPOT-M3x8 A-K CYL HEAD SCREW
8	COFFEEPOT-M4 NUT-BRASS
22	COFFEEPOT-M4 NUT-STEEL
1	COFFEEPOT-M4 WASHER
1	COFFEEPOT-M4 WING NUT
2	COFFEEPOT-M4x10 A-K C-SINK SCREW
5	COFFEEPOT-M4x10 A-K GRUB SCREW
4	COFFEEPOT-M4x10 C-SINK SCREW-BRASS
2	COFFEEPOT-M4x14 A-K CYL HEAD SCREW
2	COFFEEPOT-M4x20 A-K C-SINK SCREW
2	COFFEEPOT-M4x22 A-K CYL HEAD SCREW
6	COFFEEPOT-M4x38 STUD
2	COFFEEPOT-M4x42 STUD
26	COFFEEPOT-M5 NUT
4	COFFEEPOT-M5 WASHER
4	COFFEEPOT-M5x8 PAN HEAD SCREW-BRASS
9	COFFEEPOT-M5x10 A-K CYL HEAD SCREW
17	COFFEEPOT-M5x12 A-K CYL HEAD SCREW
12	COFFEEPOT-M5x16 A-K CYL HEAD SCREW
10	COFFEEPOT-M5x24 A-K CYL HEAD SCREW
4	COFFEEPOT-M5x32 A-K CYL HEAD SCREW
19	COFFEEPOT-M6 NUT
2	COFFEEPOT-M6 WASHER
17	COFFEEPOT-M6x14 A-K CYL HEAD SCREW
17	COFFEEPOT-M6x16 A-K CYL HEAD SCREW
4	COFFEEPOT-M6x20 A-K CYL HEAD SCREW
6	COFFEEPOT-M6x24 A-K CYL HEAD SCREW
3	COFFEEPOT-M6x30 A-K CYL HEAD SCREW
3	COFFEEPOT-M8 NUT
1	COFFEEPOT-M8 WASHER
1	COFFEEPOT-M8x16 A-K CYL HEAD SCREW

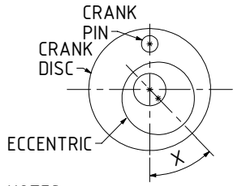

THE OFF SET ANGLE OF THE ECCENTRIC IN RELATION TO THE CRANK AXIS TO BE EXPERIMENTALLY DETERMINED FOR THE SMOOTH RUNNING OF THE ENGINE AND SATISFACTION OF THE BUILDER

NOTES:
0. ALL DRAWINGS ARE IN METRIC MEASUREMENTS
1. ALL ENGINEERING PRACTICES SHALL BE APPLIED WITH REGARDS TO HOLE AND SHAFT TOLERANCES.
2. WHERE SCREWS OR BOLTS ARE USED THE CLEARANCE HOLES SHALL BE APPROXIMATELY 5% TO 8% LARGER THAN THE MATCHING TAPPED HOLE.
3. PREFERABLY ALL TAPPED HOLES AND MATCHING SCREWS AND/OR BOLTS TO BE METRIC FINE (MF)
4. MATERIALS SPECIFIED ON THE DRAWINGS ARE INDICATIVE ONLY. THE BUILDER CAN MAKE HIS/HER OWN MATERIAL CHOICE.
5. ALL CONNECTIONS/JOINTS WHICH HAVE STEAM PRESSURE APPLIED TO IT SHALL BE SILVER/HARD SOLDERED.
6. COMPRESSION SPRINGS ARE DRAWN IN COMPRESSED STATE (CP), UNCOMPRESSED STATE IS APPROX 40% TO 60% LONGER THEN COMPRESSED STATE.
7. WHERE PREFERRED SCREW OR RIVETED CONNECTIONS CAN BE OMITTED AND PARTS CAN BE BONDED TOGETHER BY USING EITHER HIGH STRENGTH GLUE, EPOXY RESIN, OR SOLDER.
8. PARTS WHICH ARE DIRECTLY EXPOSED TO STEAM AND/OR WATER SHOULD BE CONSTRUCTED USING NON-FERROUS OR NON CORROSIVE MATERIAL SUCH AS BRASS, BRONZE, GUNMETAL, STAINLESS STEEL, COPPER OR MONEL.
9. THE ORDER IN WHICH THE PARTS/COMPONENTS ARE MANUFACTURED AND THE MODEL IS ASSEMBLED IS ENTIRELY LEFT TO THE BUILDER/MODEL MAKER.
10. A COLOUR SCHEME FOR THIS PROJECT IS ENTIRELY LEFT UP TO THE MODEL MAKER.
11. THE MANNER IN WHICH THE PARTS/COMPONENTS ARE MANUFACTURED IS ENTIRELY LEFT UP TO THE BUILDER.
12. USE LOCTITE, ON SCREW OR PRESS FIT CONNECTIONS OR SURFACES, WERE DEEMED NECESSARY TO PREVENT PARTS FROM LOOSENING.
13. WASHERS AND/OR SPRING WASHERS SHALL BE USED WHERE DEEMED NECESSARY.
14. INQUIRE AT THE APPROPRIATE AUTHORITIES WHETHER OR NOT THIS BOILER REQUIRE A PRESSURE TEST CERTIFICATE.
XX. ERRORS AND/OR OMISSIONS MAY OCCUR IN THE DRAWINGS, DO NOT HESITATE TO CONTACT ME SO THAT THE ERRORS/OMISSIONS CAN BE RECTIFIED.

MATERIAL ABBREVIATIONS:
ALU = ALUMINIUM
HALU= HARD ALUMINIUM
BRS = BRASS
BRZ = BRONZE OR GUNMETAL (BRZ/GM)
CI = CAST IRON
CU = COPPER
GRA = GRAPHITE
MS = MILD STEEL/BRIGHT MILD STEEL
SS = SILVER STEEL OR STAINLESS STEEL
SPS = SPRING STEEL
PEEK= POLYETHER ETHER KETONE
SYN = SYNTHETIC MATERIAL SUCH AS VETON, NYLON, TEFLON OR RUBBER
IN GENERAL SYNTHETIC MATERIALS SOULD BE ABLE TO WITHSTAND THE HEAT AND PRESSURE(S) APPLIED TO THEM.
nnn/nnn MEANS THAT EITHER MATERIAL CAN BE USED

OTHER ABBREVIATIONS
DP = DEEP
DAA= DRILL AFTER ASSEMBLY
D&TAA= DRILL AND TAP AFTER ASSEMBLY
CF = CLOSE FIT (SIZE FOR SIZE)
PF = PRESS FIT
PFAA= PRESS FIT AFTER ASSEMBLY
PCD = PITCH CIRCLE DIAMETER
RM = REAM
HEX = HEXACON, 6SIDED
CP = COMPRESSED
KNL = KNURLED
CSK = COUNTERSINK
PL = PLACES
DWL= DOWEL
SPF= SPOTFACE
(T)HESOP=(TAPPED)HOLES EQUALLY SPACED ON PCD
(T)HESOC=(TAPPED)HOLES EQUALLY SPACED ON CIRCUMFERENCE
SA-xxx = SUB ASSEMBLY-xxx

NOTES: THIS DESIGN IS LOOSELY BASED ON DRAWINGS AND ARTICLE WHICH I FOUND A LONG TIME AGO IN ONE OF THE "MODELBOUWER" MAGAZINES 4(2002) ALSO FOUND SOME PRINTS AND PICTURES ON THE INTERNET. THE ORIGINAL DESIGN WAS BY Mr BILL HARRIS. (USA)

TITLE
A MODEL OF A COAL FIRED TANDEM STEAM ROLLER (ALSO CALLED "COFFEEPOT")

DRAWING CONTENTS
ISOMETRIC VIEWS, NOTES AND BILL OF MATERIALS

JDW DRAUGHTING SERVICES
J.A.M. DE WAAL. 12 BRIGHTWELL STREET PAPAKURA 2110. NEW ZEALAND. PHONE: 0064 09 2988815. MOB: 0211791000
E-MAIL: dewaal@xtra.co.nz.

PROJECT No 08-12-00
PROJECTION JDWDS
DATE OCTOBER 2018
MODEL SCALE: 1:1
DWG SCALE: 1:1 @A3 OR AS SHOWN
Copyright © J.A.M. DE WAAL PAPAKURA NZ
SHEET: 02 OF 10
A3
No: 08-12-00-SHT02

1-01.1
1-01.2
1-01.3
1-01.4
1-01.5
1-01.6
1-01.7L
1-01.7R
1-01.8
1-01.9
1-01.10
1-02.1
1-02.2
1-02.3
1-03.1
1-03.2
1-03.4
1-03.5
1-04
1-05.1
1-05.2
1-05.3
1-06
1-08.1
1-08.2
1-09.1
1-09.2
1-09.3
1-10
1-11
1-12
1-13
1-14.1
1-14.2
1-14.3
1-14.4
1-14.5
1-14.6
SCALE 1:3
SCALE 1:2
SCALE 1:1.5
SCALE 1:4
1 OFF LEFTHAND
1 OFF RIGHTHAND
ALU/MS
MS/ALU
BRS
BRZ
SYN
SEAL
SOLDER ENTIRE UNIT
BEND UP
FOLD LINE
SLOT 3x2
SECTION A-A
SCALE 1 : 1.5
FOR ASSEMBLY REFER SHEET-04
FOR ALL OTHER DIMENSION DETAILS REFER TO 1-02.3
1.5mm THICK
3mm THICK
4mm THICK

NOTES: THIS DESIGN IS LOOSELY BASED ON DRAWINGS AND ARTICLE WHICH I FOUND A LONG TIME AGO IN ONE OF THE "MODELBOUWER" MAGAZINES 4(2002) ALSO FOUND SOME PRINTS AND PICTURES ON THE INTERNET. THE ORIGINAL DESIGN (IMPERIAL) WAS BY Mr BILL HARRIS. (USA)

TITLE
A MODEL OF A COAL FIRED TANDEM STEAM ROLLER (ALSO CALLED "COFFEEPOT")

DRAWING CONTENTS
PARTS AND ASSEMBLIES

PROJECT No 08-12-00
JDW DRAUGHTING SERVICES
J.A.M. DE WAAL. 12 BRIGHTWELL STREET PAPAKURA 2110. NEW ZEALAND. PHONE: 0064 09 2988815. MOB: 0211791000
E-MAIL: dewaal@xtra.co.nz.

PROJECTION
JDWDS
DATE OCTOBER 2018

MODEL SCALE: 1:1
DWG SCALE: 1:1 @A3 OR AS SHOWN

Copyright © J.A.M. DE WAAL PAPAKURA NZ

SHEET: 03 OF 10
A3
No: 08-12-00-SHT03

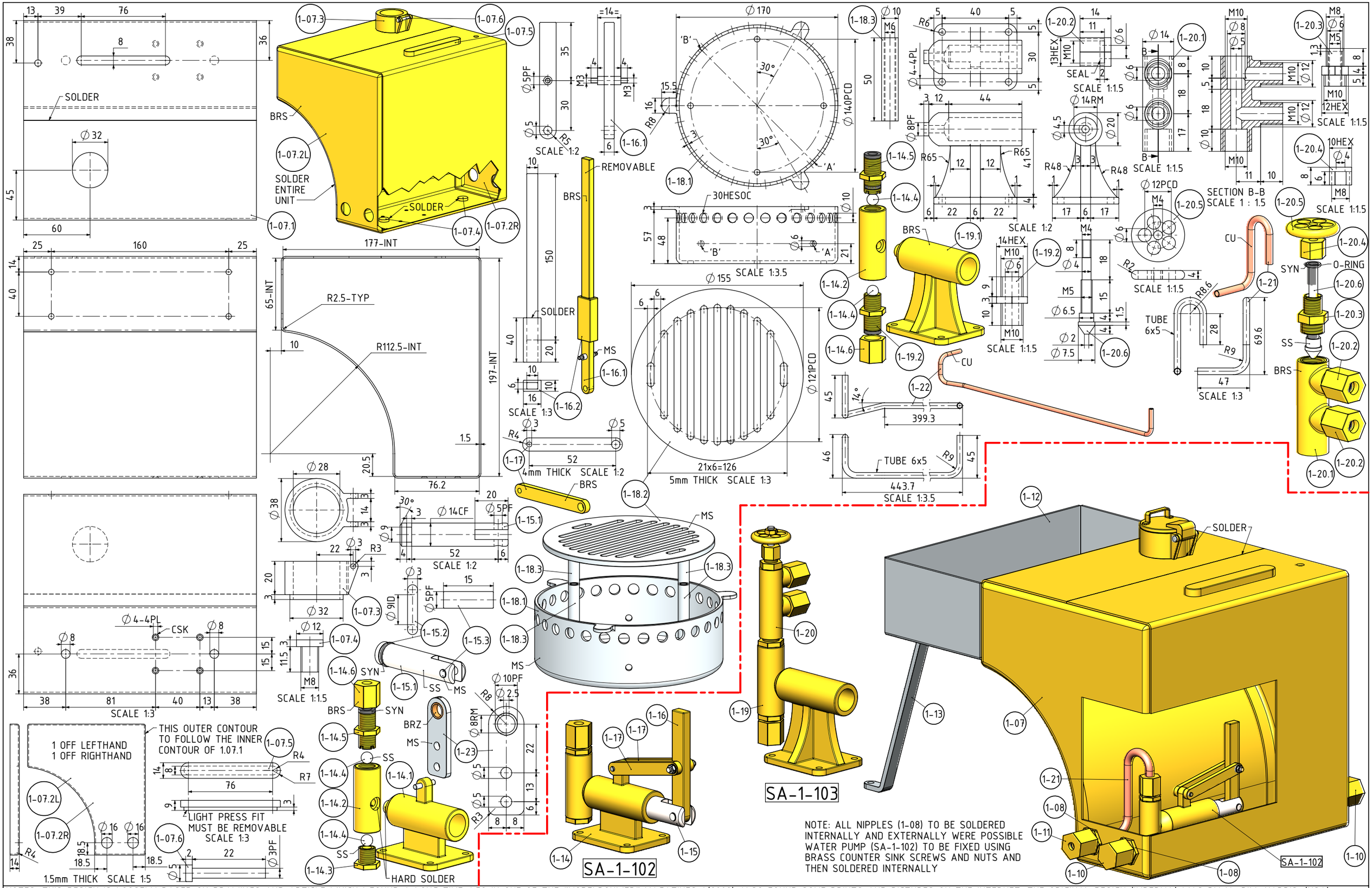

NOTE: ALL NIPPLES (1-08) TO BE SOLDERED INTERNALLY AND EXTERNALLY WERE POSSIBLE WATER PUMP (SA-1-102) TO BE FIXED USING BRASS COUNTER SINK SCREWS AND NUTS AND THEN SOLDERED INTERNALLY

NOTES: THIS DESIGN IS LOOSELY BASED ON DRAWINGS AND ARTICLE WHICH I FOUND A LONG TIME AGO IN ONE OF THE "MODELBOUWER" MAGAZINES 4(2002) ALSO FOUND SOME PRINTS AND PICTURES ON THE INTERNET. THE ORIGINAL DESIGN (IMPERIAL) WAS BY Mr BILL HARRIS. (USA)

TITLE

A MODEL OF A COAL FIRED TANDEM STEAM ROLLER (ALSO CALLED "COFFEEPOT")

DRAWING CONTENTS

PARTS AND ASSEMBLIES

PROJECT No 08-12-00

JDW DRAUGHTING SERVICES
J.A.M. DE WAAL. 12 BRIGHTWELL STREET PAPAKURA 2110. NEW ZEALAND. PHONE: 0064 09 2988815. MOB: 0211791000
E-MAIL: dewaal@xtra.co.nz.

PROJECTION JDWDS

DATE OCTOBER 2018

SHEET: 04 OF 10

MODEL SCALE: 1:1

DWG SCALE: 1:1 @A3 OR AS SHOWN

Copyright © J.A.M. DE WAAL PAPAKURA NZ

A3 No: 08-12-00-SHT04

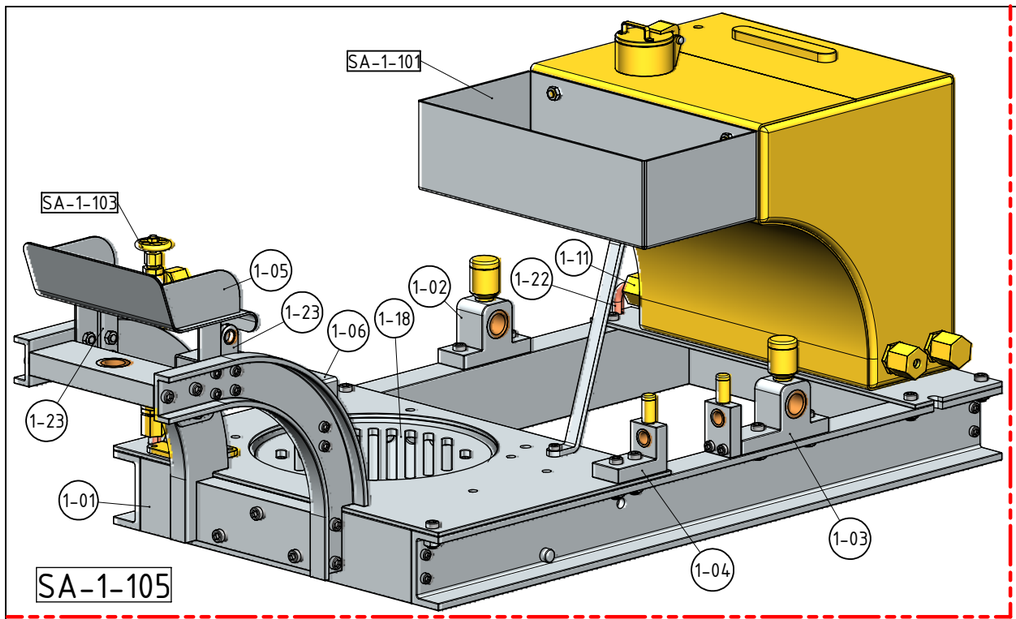

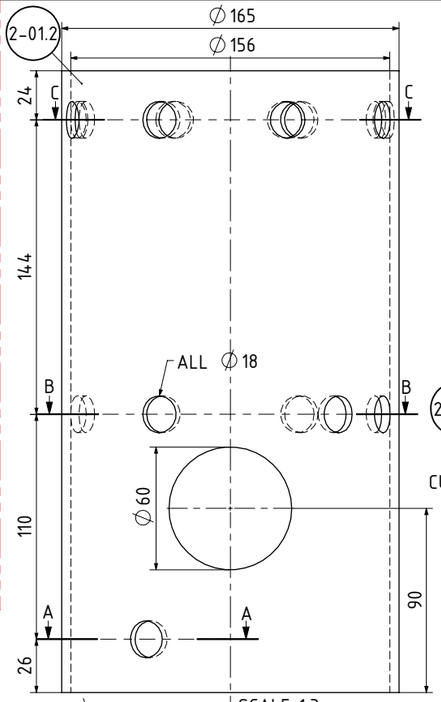

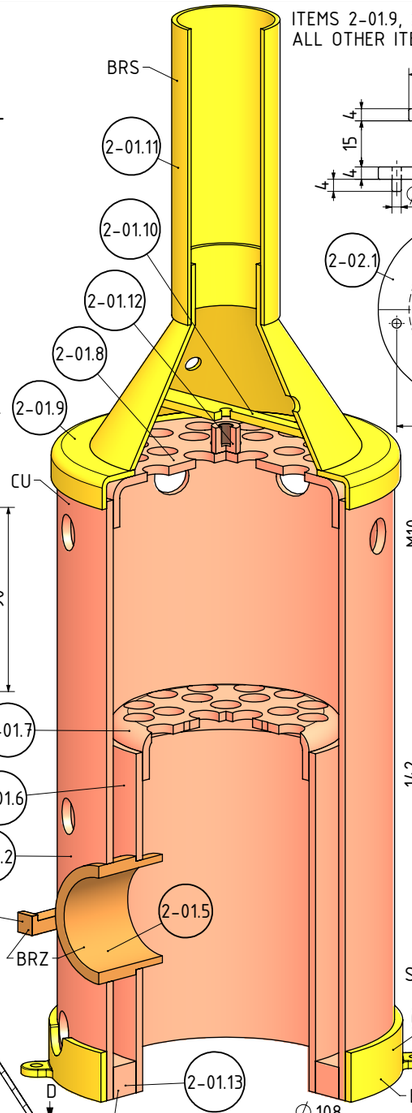

ITEMS 2-01.9, 2-01.10 AND 2-01.11 TO BE SOLDERED TOGETHER USING SOFT SOLDER.
ALL OTHER ITEMS/COMPONENTS TO BE HARD OR SILVER SOLDERED

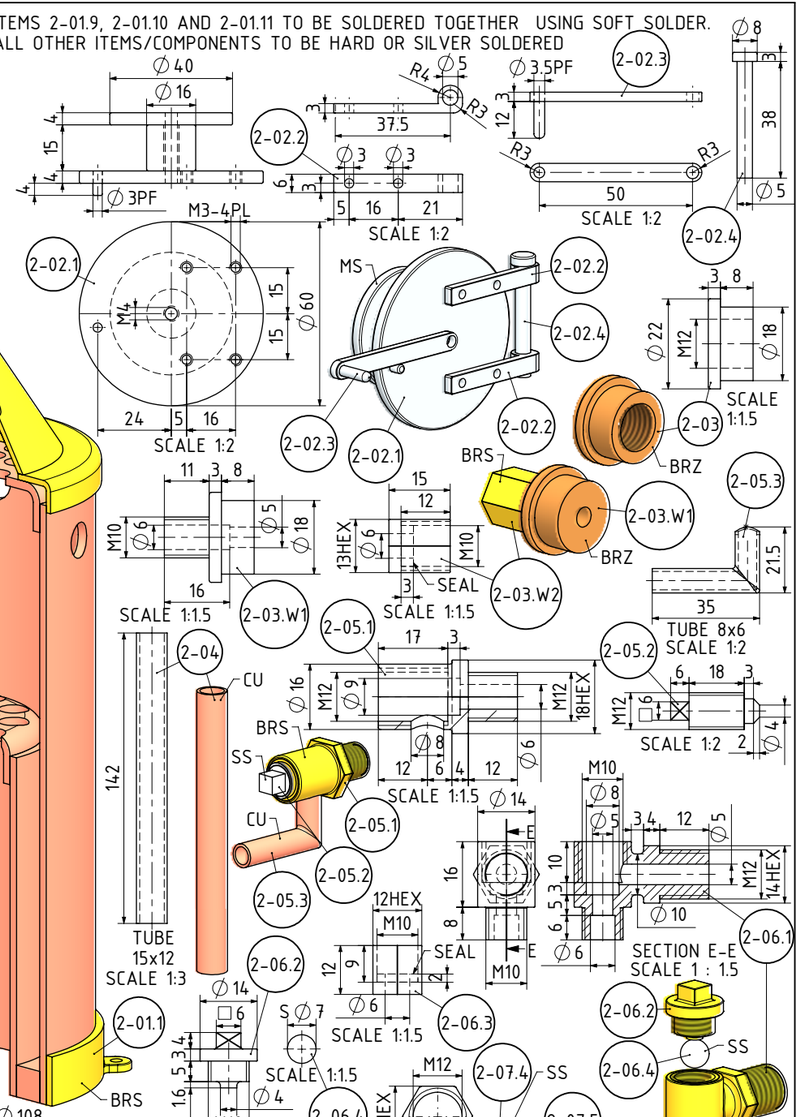

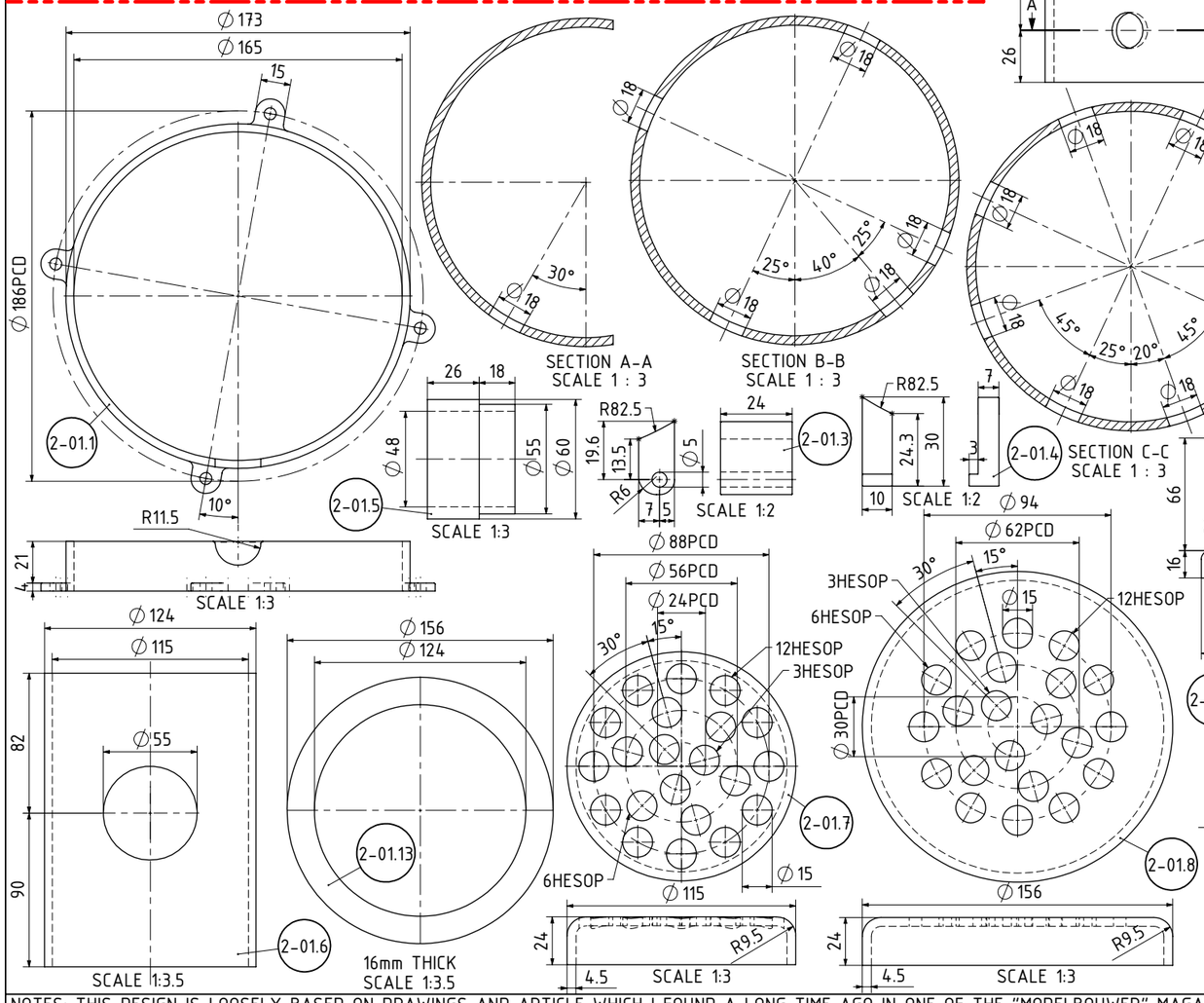

NOTES: THIS DESIGN IS LOOSELY BASED ON DRAWINGS AND ARTICLE WHICH I FOUND A LONG TIME AGO IN ONE OF THE "MODELBOUWER" MAGAZINES 4(2002) ALSO FOUND SOME PRINTS AND PICTURES ON THE INTERNET. THE ORIGINAL DESIGN (IMPERIAL) WAS BY Mr BILL HARRIS. (USA)

TITLE
A MODEL OF A COAL FIRED TANDEM STEAM ROLLER (ALSO CALLED "COFFEEPOT")

DRAWING CONTENTS
PARTS AND ASSEMBLIES

PROJECT No 08-12-00

JDW DRAUGHTING SERVICES
J.A.M. DE WAAL. 12 BRIGHTWELL STREET PAPAKURA 2110. NEW ZEALAND. PHONE: 0064 09 2988815. MOB: 0211791000
E-MAIL: dewaal@xtra.co.nz.

PROJECTION JDWDS
DATE OCTOBER 2018
SHEET: 05 OF 10

MODEL SCALE: 1:1
DWG SCALE: 1:1 @A3 OR AS SHOWN
Copyright © J.A.M. DE WAAL PAPAKURA NZ
A3 No: 08-12-00-SHT05

SCALE 1:1.5
SCALE 1:2
SCALE 1:3
SECTION A-A SCALE 1 : 2
SECTION B-B
SECTION C-C SCALE 1 : 1.5
SECTION D-D
FINAL SHAPE AND FORM TO BE DONE ON SITE
PROPRIETY ITEM
SA-2-201
SA-2-202
SA-2-206
SA-2-210
SA-1-105

NOTES: THIS DESIGN IS LOOSELY BASED ON DRAWINGS AND ARTICLE WHICH I FOUND A LONG TIME AGO IN ONE OF THE "MODELBOUWER" MAGAZINES 4(2002) ALSO FOUND SOME PRINTS AND PICTURES ON THE INTERNET. THE ORIGINAL DESIGN (IMPERIAL) WAS BY Mr BILL HARRIS. (USA)

TITLE
A MODEL OF A COAL FIRED TANDEM STEAM ROLLER (ALSO CALLED "COFFEEPOT")

DRAWING CONTENTS
PARTS AND ASSEMBLIES

PROJECT No 08-12-00
JDW DRAUGHTING SERVICES
J.A.M. DE WAAL. 12 BRIGHTWELL STREET PAPAKURA 2110. NEW ZEALAND. PHONE: 0064 09 2988815. MOB: 0211791000
E-MAIL: dewaal@xtra.co.nz.

PROJECTION
JDWDS
DATE OCTOBER 2018

MODEL SCALE: 1:1
DWG SCALE: 1:1 @A3 OR AS SHOWN
Copyright © J.A.M. DE WAAL PAPAKURA NZ
SHEET: 06 OF 10 | A3 | No: 08-12-00-SHT06

4mm THICK PLATE

SCALE 1:2

SCALE 1:1.5

OPPOSITE FACE EQUAL

1 OFF LEFTHAND
1 OFF RIGHTHAND

HIDDEN LINES REMOVED FOR CLARITY

SECTION A-A
SCALE 1 : 1.5

SECTION B-B
SCALE 1 : 1.5

SECTION C-C
SCALE 1 : 1.5

SECTION D-D
SCALE 1 : 1.5

SECTION E-E
SCALE 1 : 1.5

TAKE OVER FROM 3-04.1

1mm THICK
SCALE 1:2

4mm THICK
SCALE 1:2

4mm THICK
SCALE 1:1.5

SCALE 1:4

SCALE 1:4

SA-3-301

SA-3-302

SA-3-303

NOTES: THIS DESIGN IS LOOSELY BASED ON DRAWINGS AND ARTICLE WHICH I FOUND A LONG TIME AGO IN ONE OF THE "MODELBOUWER" MAGAZINES 4(2002) ALSO FOUND SOME PRINTS AND PICTURES ON THE INTERNET. THE ORIGINAL DESIGN (IMPERIAL) WAS BY Mr BILL HARRIS. (USA)

TITLE

A MODEL OF A COAL FIRED TANDEM STEAM ROLLER (ALSO CALLED "COFFEEPOT")

DRAWING CONTENTS

PARTS AND ASSEMBLIES

PROJECT No 08-12-00

JDW DRAUGHTING SERVICES
J.A.M. DE WAAL. 12 BRIGHTWELL STREET PAPAKURA 2110. NEW ZEALAND. PHONE: 0064 09 2988815. MOB: 0211791000
E-MAIL: dewaal@xtra.co.nz.

PROJECTION JDWDS

DATE OCTOBER 2018

MODEL SCALE: 1:1

DWG SCALE: 1:1 @A3 OR AS SHOWN

Copyright © J.A.M. DE WAAL PAPAKURA NZ

SHEET: 07 OF 10 | A3 | No: 08-12-00-SHT07

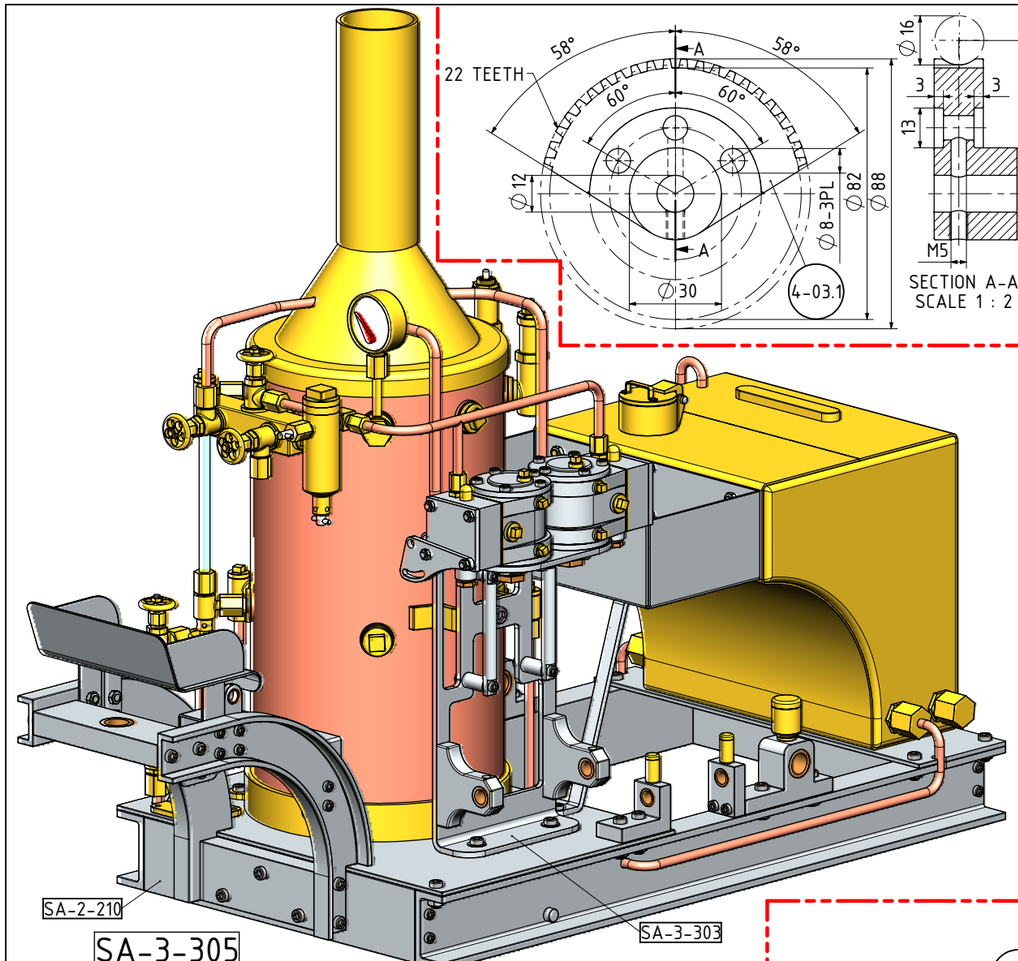

NOTES: THIS DESIGN IS LOOSELY BASED ON DRAWINGS AND ARTICLE WHICH I FOUND A LONG TIME AGO IN ONE OF THE "MODELBOUWER" MAGAZINES 4(2002) ALSO FOUND SOME PRINTS AND PICTURES ON THE INTERNET. THE ORIGINAL DESIGN (IMPERIAL) WAS BY Mr BILL HARRIS. (USA)

TITLE

A MODEL OF A COAL FIRED TANDEM STEAM ROLLER (ALSO CALLED "COFFEEPOT")

DRAWING CONTENTS

PARTS AND ASSEMBLIES

JDW DRAUGHTING SERVICES
J.A.M. DE WAAL. 12 BRIGHTWELL STREET PAPAKURA 2110. NEW ZEALAND. PHONE: 0064 09 2988815. MOB: 0211791000
E-MAIL: dewaal@xtra.co.nz.

PROJECT No 08-12-00

PROJECTION JDWDS

DATE OCTOBER 2018

SHEET: 08 OF 10

MODEL SCALE: 1:1

DWG SCALE: 1:1 @A3 OR AS SHOWN

Copyright © J.A.M. DE WAAL PAPAKURA NZ

A3

No: 08-12-00-SHT08

SA-4-401

SA-4-402

SA-4-403

SA-4-404

SA-4-405

SA-4-406

SA-4-410

NOTES: THIS DESIGN IS LOOSELY BASED ON DRAWINGS AND ARTICLE WHICH I FOUND A LONG TIME AGO IN ONE OF THE "MODELBOUWER" MAGAZINES 4(2002) ALSO FOUND SOME PRINTS AND PICTURES ON THE INTERNET. THE ORIGINAL DESIGN (IMPERIAL) WAS BY Mr BILL HARRIS. (USA)

TITLE

A MODEL OF A COAL FIRED TANDEM STEAM ROLLER (ALSO CALLED "COFFEEPOT")

DRAWING CONTENTS

PARTS AND ASSEMBLIES

JDW DRAUGHTING SERVICES

J.A.M. DE WAAL. 12 BRIGHTWELL STREET PAPAKURA 2110. NEW ZEALAND. PHONE: 0064 09 2988815. MOB: 0211791000 E-MAIL: dewaal@xtra.co.nz.

PROJECT No 08-12-00

PROJECTION

JDWDS

DATE OCTOBER 2018

SHEET: 09 OF 10

MODEL SCALE: 1:1

DWG SCALE: 1:1 @A3 OR AS SHOWN

Copyright © J.A.M. DE WAAL PAPAKURA NZ

A3

No: 08-12-00-SHT09

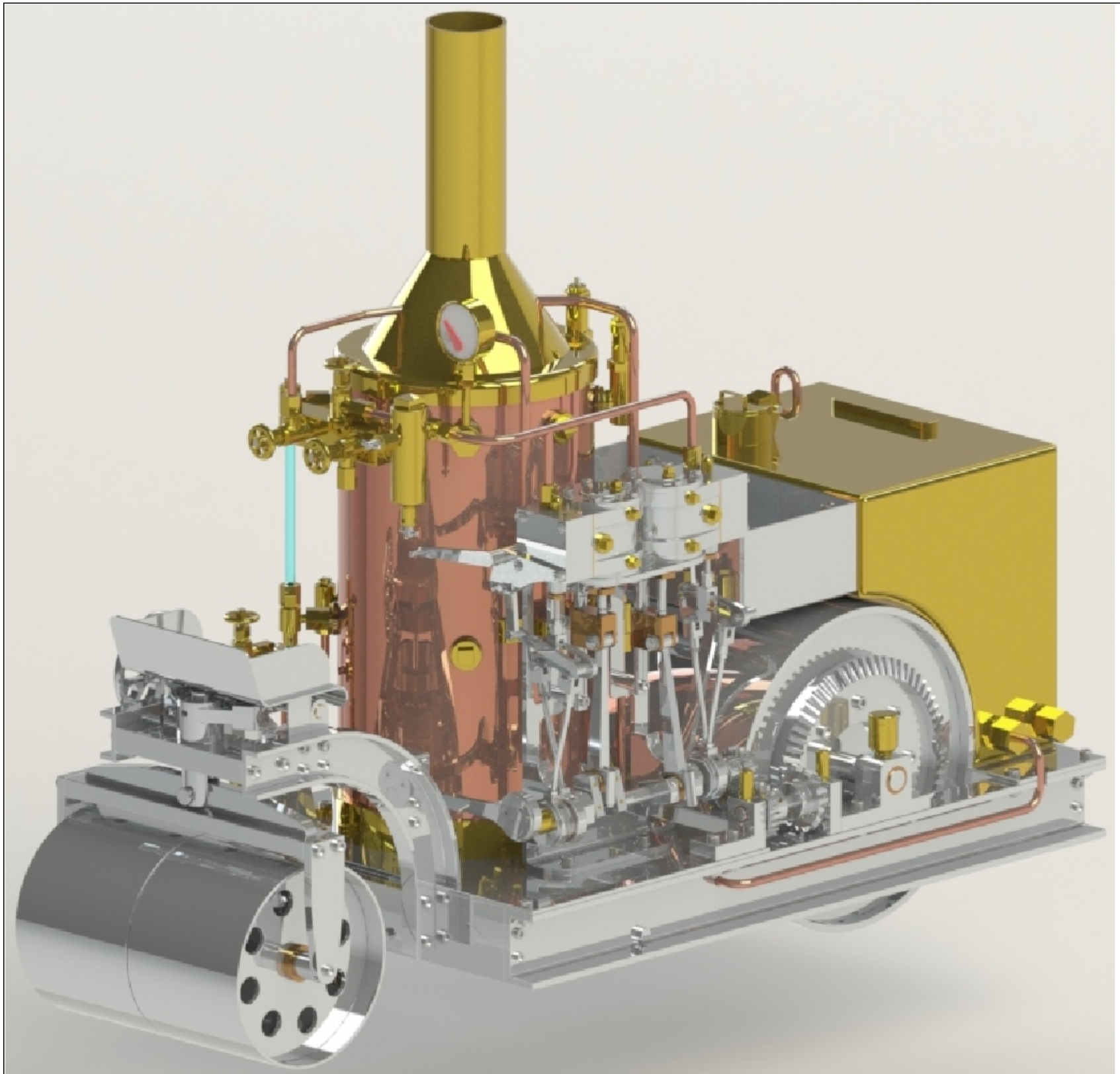

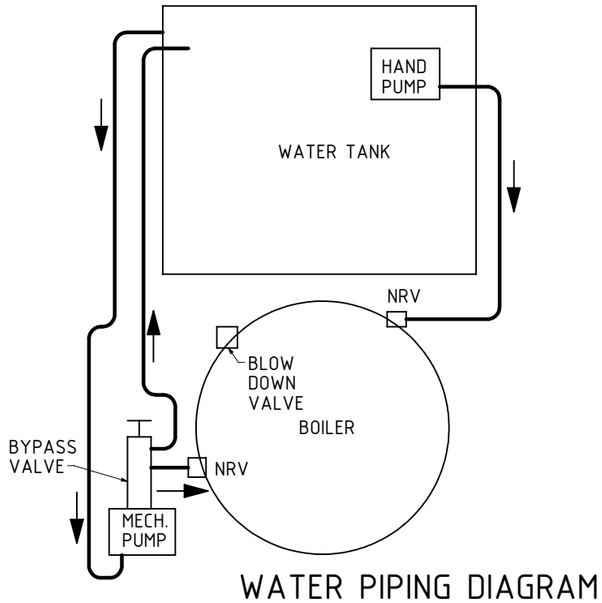

WATER PIPING DIAGRAM

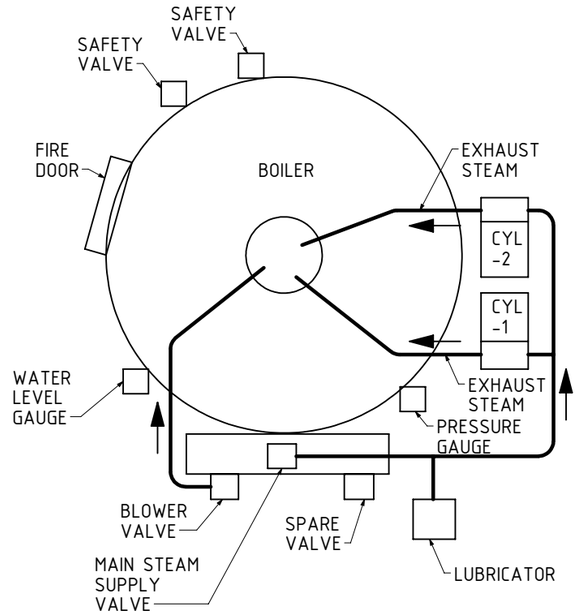

STEAM PIPING DIAGRAM

NOTES: THIS DESIGN IS LOOSELY BASED ON DRAWINGS AND ARTICLE WHICH I FOUND A LONG TIME AGO IN ONE OF THE "MODELBOUWER" MAGAZINES 4(2002) ALSO FOUND SOME PRINTS AND PICTURES ON THE INTERNET. THE ORIGINAL DESIGN (IMPERIAL) WAS BY Mr BILL HARRIS. (USA)

TITLE
A MODEL OF A COAL FIRED TANDEM STEAM ROLLER (ALSO CALLED "COFFEEPOT")

DRAWING CONTENTS
RENDERED PICTURE

JDW DRAUGHTING SERVICES
J.A.M. DE WAAL. 12 BRIGHTWELL STREET PAPAKURA 2110. NEW ZEALAND. PHONE: 0064 09 2988815. MOB: 0211791000
E-MAIL: dewaal@xtra.co.nz.

PROJECT No 08-12-00

PROJECTION JDWDS

DATE OCTOBER 2018

MODEL SCALE: 1:1

DWG SCALE: 1:1 @A3 OR AS SHOWN

Copyright © J.A.M. DE WAAL PAPAKURA NZ

SHEET: 10 OF 10

A3

No: 08-12-00-SHT10

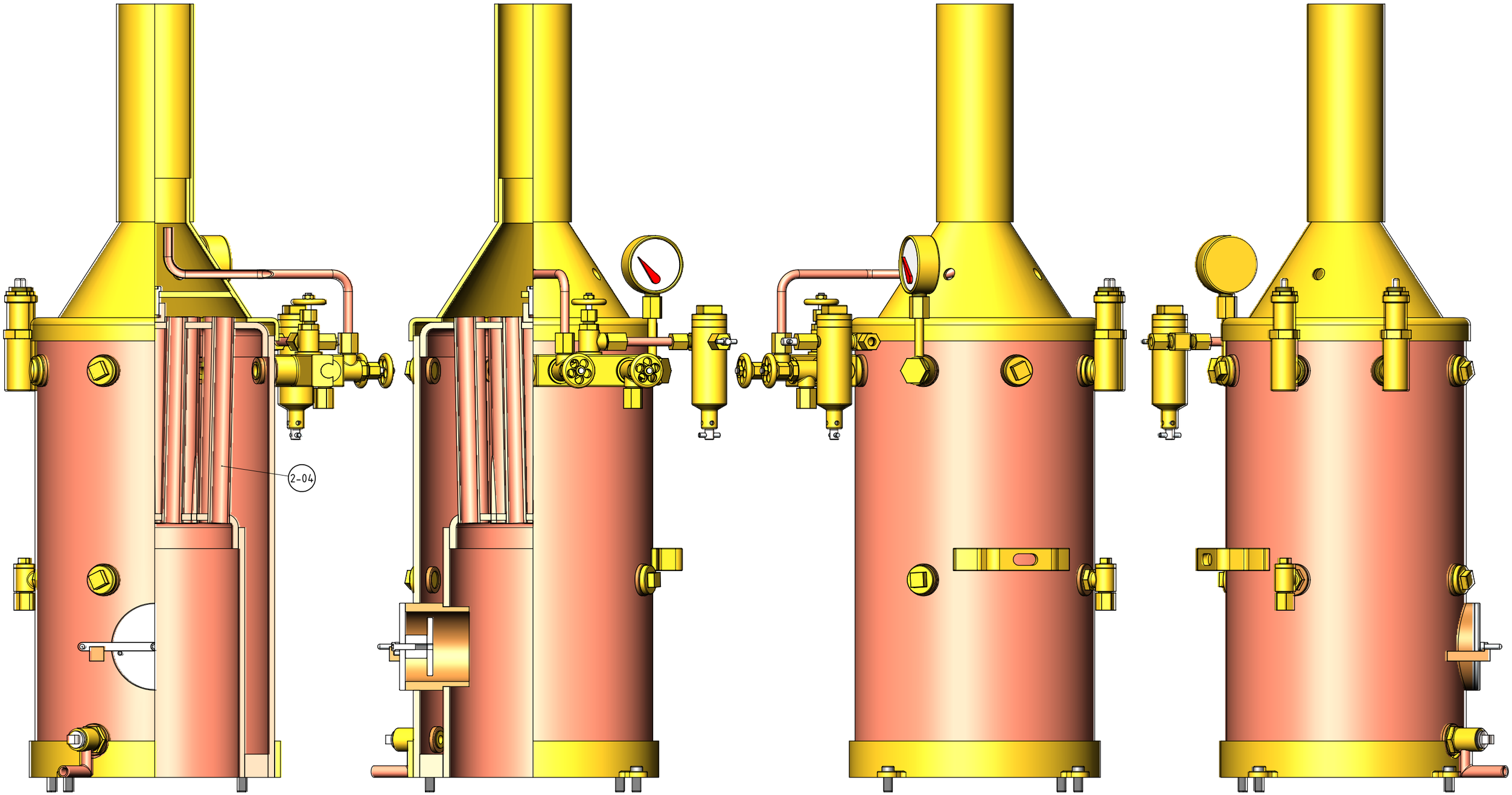

NOTES: THIS DESIGN IS LOOSELY BASED ON DRAWINGS AND ARTICLE WHICH I FOUND A LONG TIME AGO IN ONE OF THE "MODELBOUWER" MAGAZINES 4(2002) ALSO FOUND SOME PRINTS AND PICTURES ON THE INTERNET. THE ORIGINAL DESIGN (IMPERIAL) WAS BY Mr BILL HARRIS. (USA)

TITLE

A MODEL OF A COAL FIRED TANDEM STEAM ROLLER (ALSO CALLED "COFFEEPOT")

DRAWING CONTENTS

BOILER SECTION VIEWS

PROJECT No 08-12-00

JDW DRAUGHTING SERVICES

J.A.M. DE WAAL. 12 BRIGHTWELL STREET PAPAKURA 2110. NEW ZEALAND. PHONE: 0064 09 2988815. MOB: 0211791000 E-MAIL: dewaal@xtra.co.nz.

PROJECTION JDWDS

DATE OCTOBER 2018

SHEET: 11 OF 11

MODEL SCALE: 1:1

DWG SCALE: 1:1 @A3 OR AS SHOWN

Copyright © J.A.M. DE WAAL PAPAKURA NZ

A3 No: 08-12-00-SHT11