QTY.	PART NUMBER
1	MUNCASTER4.1-1-01-BED PLATE
2	MUNCASTER4.1-1-02-BEARING BLOCK
1	MUNCASTER4.1-1-03-CROSSHEAD SLIDE
1	MUNCASTER4.1-1-04-VALVE SPINDLE GUIDE BLOCK
1	MUNCASTER4.1-1-05-CYLINDER
1	MUNCASTER4.1-1-06-CYLINDER FRONT COVER
1	MUNCASTER4.1-1-07-CYLINDER REAR COVER
1	MUNCASTER4.1-1-08-SLIDE VAVLE PORT PLATE
1	MUNCASTER4.1-1-09-VALVE CHEST
1	MUNCASTER4.1-1-10-VALVE CHEST COVER
1	MUNCASTER4.1-1-11-WALL BASE
1	MUNCASTER4.1-1-12-NAME PLATE
1	MUNCASTER4.1-2-01-CRANKSHAFT
1	MUNCASTER4.1-2-02-FLYWHEEL
1	MUNCASTER4.1-2-03-ECCENTRIC SHEAVE
1	MUNCASTER4.1-2-04-PISTON+CROSSHEAD
1	MUNCASTER4.1-2-05-CON-ROD
1	MUNCASTER4.1-2-06-ECCENTRIC STRAP
1	MUNCASTER4.1-2-07-SLIDE VALVE+SPINDLE
1	MUNCASTER4.1-M2.5 NUT
1	MUNCASTER4.1-M2.5 WASHER
2	MUNCASTER4.1-M3 NUT
2	MUNCASTER4.1-M3x6 GRUB SREW
2	MUNCASTER4.1-M3x10 C-SINK SCREW
9	MUNCASTER4.1-M3x10 HEX BOLT
2	MUNCASTER4.1-M3x18 HEX BOLT
3	MUNCASTER4.1-M4 NUT
1	MUNCASTER4.1-M4 WASHER
2	MUNCASTER4.1-M4x8 HEX BOLT
16	MUNCASTER4.1-M4x10 HEX BOLT
4	MUNCASTER4.1-M4x14 HEX BOLT
4	MUNCASTER4.1-M4x16 HEX BOLT
8	MUNCASTER4.1-M4x24 HEX BOLT
2	MUNCASTER4.1-M4x28 HEX BOLT
8	MUNCASTER4.1-M5 NUT
8	MUNCASTER4.1-M5x28 HEX BOLT

MATERIAL ABBREVIATIONS:
ALU = ALUMINIUM/HARD ALUMINIUM
BRS = BRASS
BRZ = BRONZE OR GUNMETAL (BRZ/GM)
CI = CAST IRON
CU = COPPER
GRA = GRAPHITE
MS = MILD STEEL/BRIGHT MILD STEEL
S/S = SILVER STEEL OR STAINLESS STEEL
SPS = SPRING STEEL
PEEK= POLYETHER ETHER KETONE
SYN = SYNTHETIC MATERIAL SUCH AS VETON, NYLON, TEFLON OR RUBBER
IN GENERAL SYNTHETIC MATERIALS SOULD BE ABLE TO WITHSTAND THE HEAT AND PRESSURE(S) APPLIED TO THEM.
nnn/nnn MEANS THAT EITHER MATERIAL CAN BE USED

NOTES:
0. ALL DRAWINGS ARE IN METRIC MEASUREMENTS
1. ALL ENGINEERING PRACTICES SHALL BE APPLIED WITH REGARDS TO HOLE AND SHAFT TOLERANCES.
2. WHERE SCREWS OR BOLTS ARE USED THE CLEARANCE HOLES SHALL BE APPROXIMATELY 5% TO 8% LARGER THAN THE MATCHING TAPPED HOLE.
3. PREFERABLY ALL TAPPED HOLES AND MATCHING SCREWS AND/OR BOLTS TO BE METRIC FINE (MF)
4. MATERIALS SPECIFIED ON THE DRAWINGS ARE INDICATIVE ONLY. THE BUILDER CAN MAKE HIS/HER OWN MATERIAL CHOICE.
5. ALL CONNECTIONS/JOINTS WHICH HAVE STEAM PRESSURE APPLIED TO IT SHALL BE SILVER/HARD SOLDERED.
6. COMPRESSION SPRINGS ARE DRAWN IN COMPRESSED STATE (CP), UNCOMPRESSED STATE IS APPROX 40% TO 60% LONGER THEN COMPRESSED STATE.
7. WHERE PREFERRED SCREW OR RIVETED CONNECTIONS CAN BE OMITTED AND PARTS CAN BE BONDED TOGETHER BY USING EITHER HIGH STRENGTH GLUE, EPOXY RESIN, OR SOLDER.
8. PARTS WHICH ARE DIRECTLY EXPOSED TO STEAM AND/OR WATER SHOULD BE CONSTRUCTED USING NON-FERROUS OR NON CORROSIVE MATERIAL SUCH AS BRASS, BRONZE, GUNMETAL, STAINLESS STEEL, COPPER OR MONEL.
9. THE ORDER IN WHICH THE PARTS/COMPONENTS ARE MANUFACTURED AND THE MODEL IS ASSEMBLED IS ENTIRELY LEFT TO THE BUILDER/MODEL MAKER.
10. A COLOUR SCHEME FOR THIS PROJECT IS ENTIRELY LEFT UP TO THE MODEL MAKER.
11. THE MANNER IN WHICH THE PARTS/COMPONENTS ARE MANUFACTURED IS ENTIRELY LEFT UP TO THE BUILDER.
12. USE LOCTITE, ON SCREW OR PRESS FIT CONNECTIONS OR SURFACES, WERE DEEMED NECESSARY TO PREVENT PARTS FROM LOOSENING.
13. WASHER SHALL BE USED WHERE DEEMED NECESSARY.
XX. ERRORS AND/OR OMISSIONS MAY OCCUR IN THE DRAWINGS, DO NOT HESITATE TO CONTACT ME SO THAT THE ERRORS/OMISSIONS CAN BE RECTIFIED.

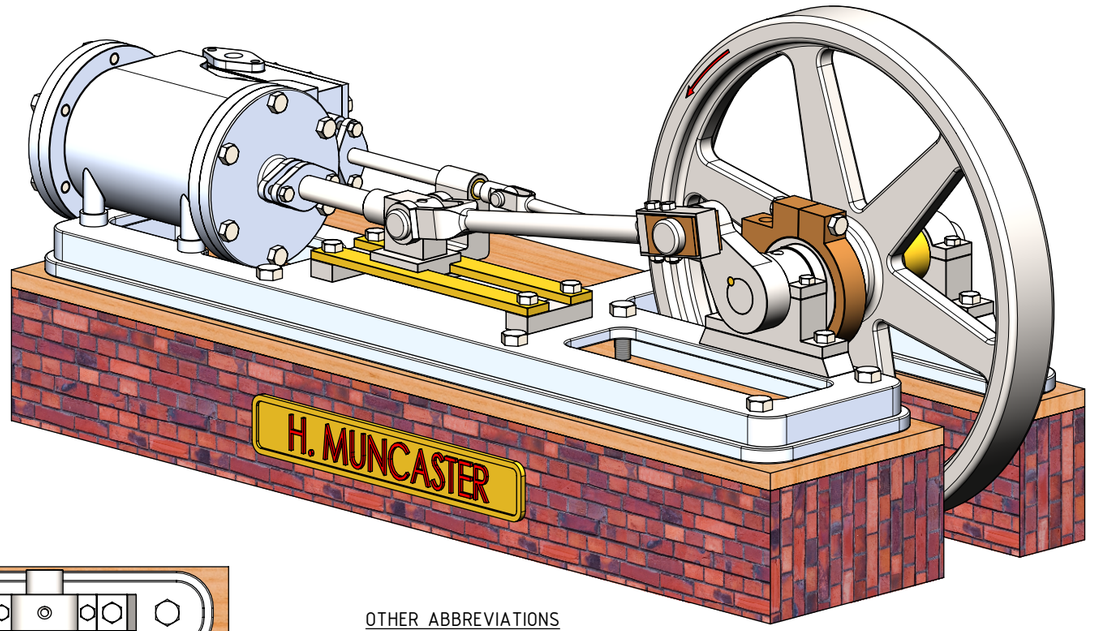

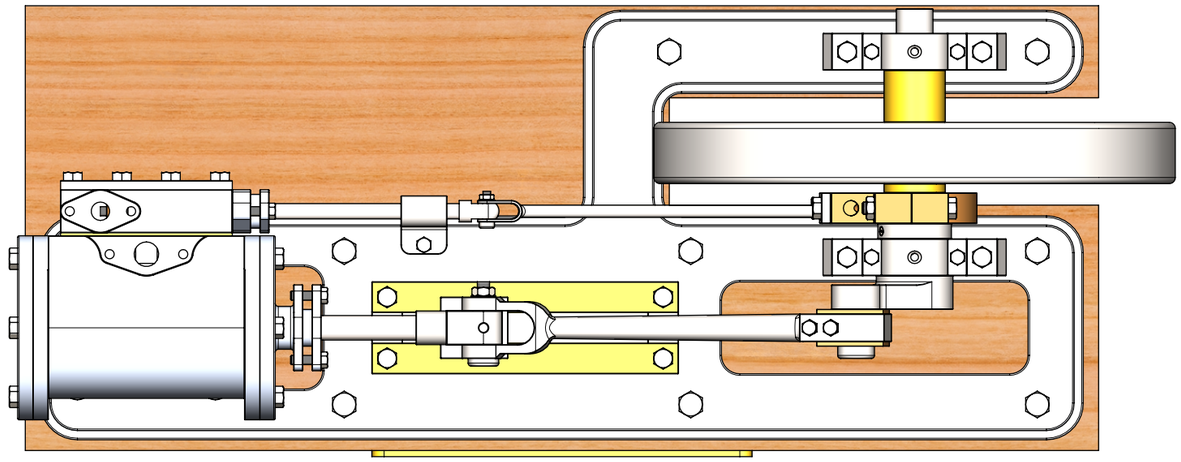

OTHER ABBREVIATIONS
DP = DEEP
DAA= DRILL AFTER ASSEMBLY
D&TAA= DRILL AND TAP AFTER ASSEMBLY
CF = CLOSE FIT (SIZE FOR SIZE)
PF = PRESS FIT
PFAA= PRESS FIT AFTER ASSEMBLY
PCD = PITCH CIRCLE DIAMETER
RM = REAM
HEX = HEXACON, 6SIDED
CP = COMPRESSED
KNL = KNURLED
CSK = COUNTERSINK
PL = PLACES
DWL= DOWEL
(T)HESOP=(TAPPED)HOLES EQUALLY SPACED ON PCD
(T)HESOC=(TAPPED)HOLES EQUALLY SPACED ON CIRCUMFERENCE
SA-xxx = SUB ASSEMBLY-xxx

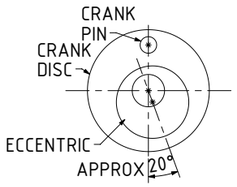

THE OFF SET ANGLE OF THE ECCENTRIC IN RELATION TO THE CRANK AXIS TO BE EXPERIMENTALLY DETERMINED FOR THE SMOOTH RUNNING OF THE ENGINE AND SATISFACTION OF THE BUILDER

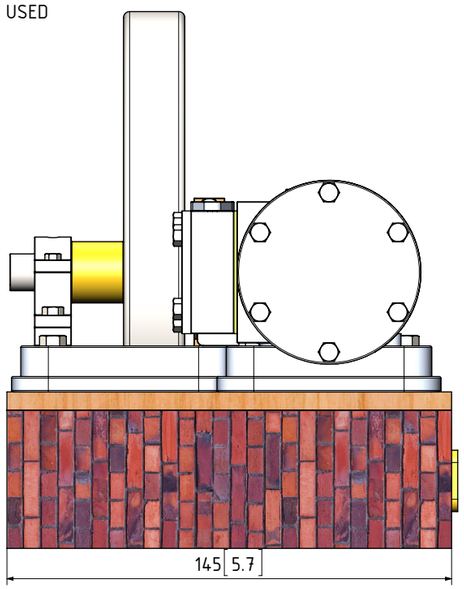

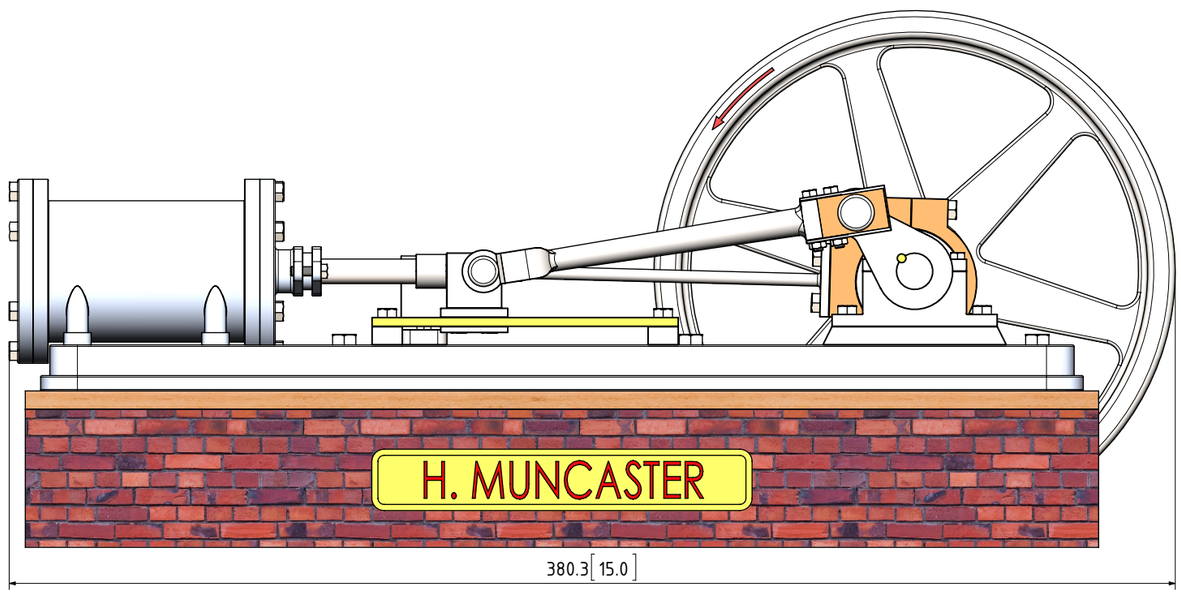

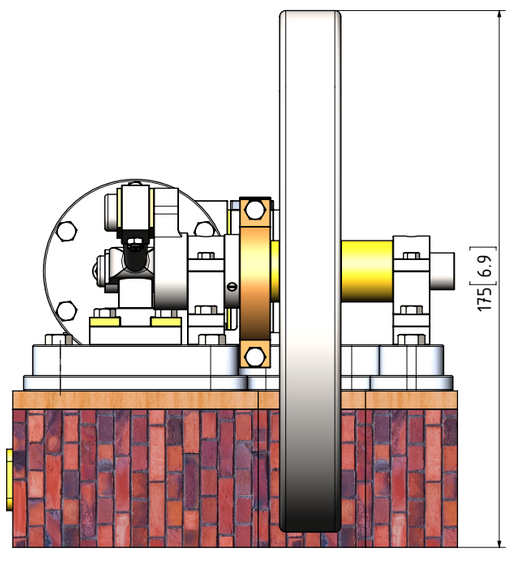

NOTES: THE ORIGINAL DRAWINGS WERE PUBLISHED IN THE "MODEL ENGINEER" MAGAZINE OF FEBTUARY 1957 UNDER THE HEADING OF "THE MUNCASTER STEAM-ENGINE MODELS".

TITLE
1 CYL HORIZONTAL MILL STEAM ENGINE WITH BAR CROSSHEAD SLIDES BY H.MUNCASTER.

DRAWING CONTENTS
GENERALARRANGEMENT, B.O.M., NOTES, ISOMETRIC VIEW

PROJECT No 11-04-01

JDW DRAUGHTING SERVICES
J.A.M. DE WAAL. 12 BRIGHTWELL STREET PAPAKURA 2110. NEW ZEALAND. PHONE: 0064 09 2988815. MOB: 0211791000
E-MAIL: dewaal@xtra.co.nz.

PROJECTION JDWDS
DATE APRIL-2017
SHEET: 01 OF 03

MODEL SCALE: 1:1
DWG SCALE: 1:1 @A3 OR AS SHOWN
Copyright © J.A.M. DE WAAL PAPAKURA NZ
A3 No:MUNCASTER4.1-01

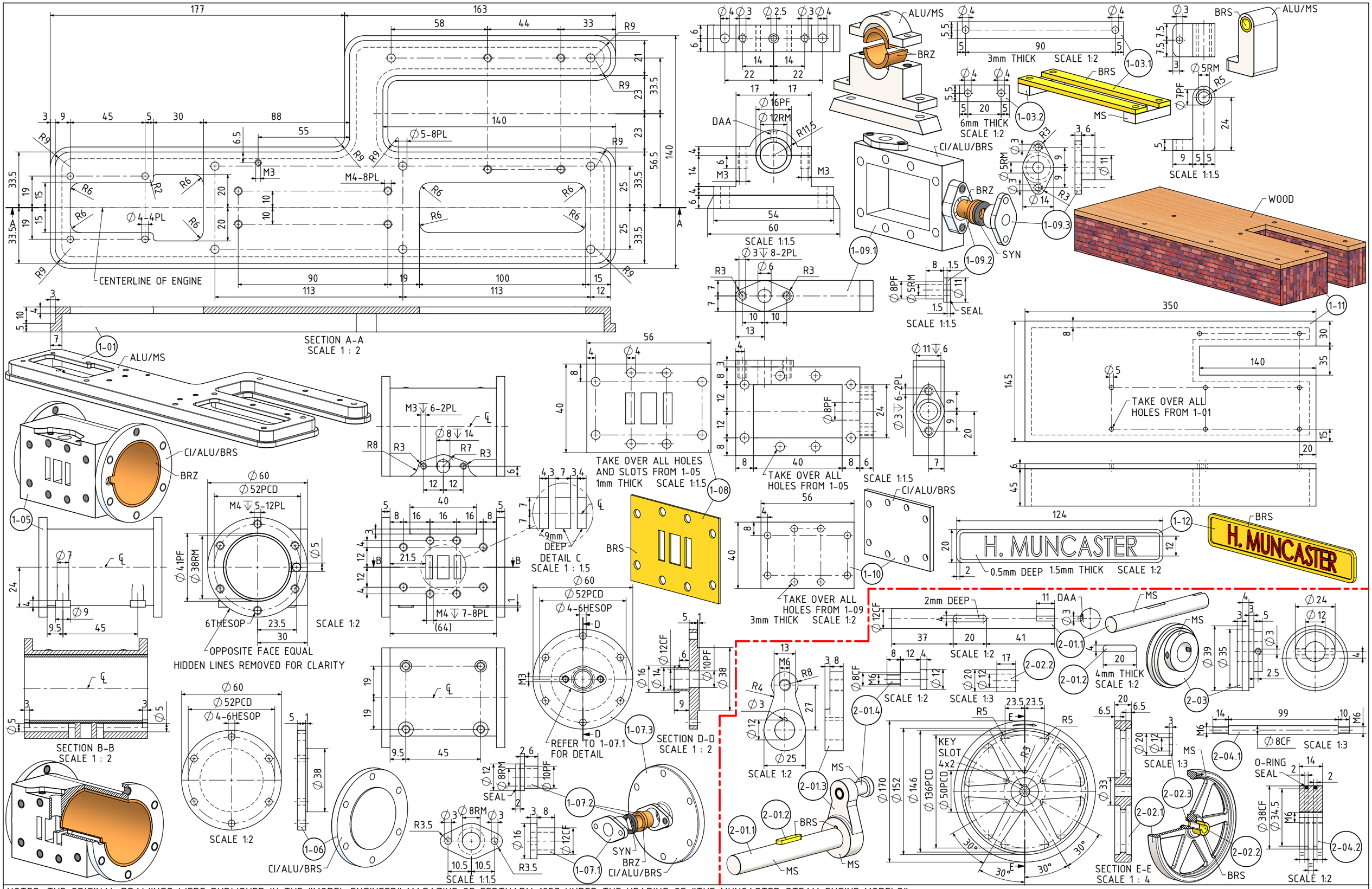

NOTES: THE ORIGINAL DRAWINGS WERE PUBLISHED IN THE "MODEL ENGINEER" MAGAZINE OF FEBTUARY 1957 UNDER THE HEADING OF "THE MUNCASTER STEAM-ENGINE MODELS".

TITLE 1 CYL HORIZONTAL MILL STEAM ENGINE WITH BAR CROSSHEAD SLIDES BY H.MUNCASTER.	DRAWING CONTENTS PARTS AND ASSEMBLIES	PROJECT No 11-04-01 JDW DRAUGHTING SERVICES J.A.M. DE WAAL. 12 BRIGHTWELL STREET PAPAKURA 2110. NEW ZEALAND. PHONE: 0064 09 2988815. MOB: 0211791000 E-MAIL: dewaal@xtra.co.nz.	PROJECTION JDWDS DATE APRIL-2017 SHEET: 02 OF 03	MODEL SCALE: 1:1 DWG SCALE: 1:1 @A3 OR AS SHOWN Copyright © J.A.M. DE WAAL PAPAKURA NZ A3 No:MUNCASTER4.1-02

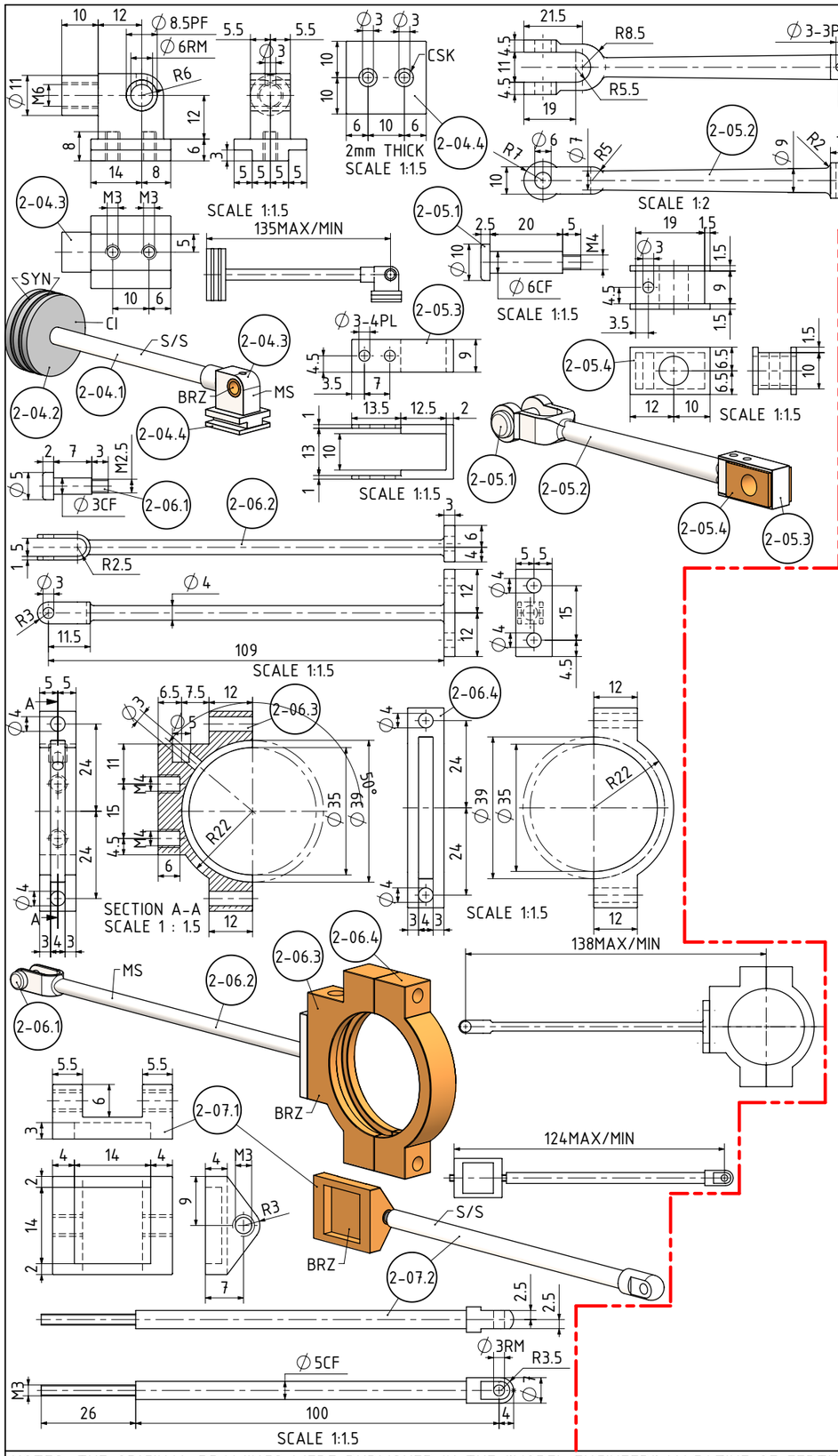

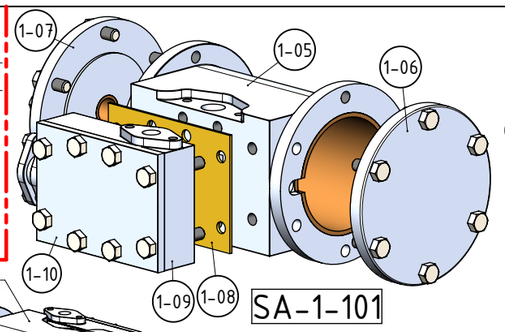

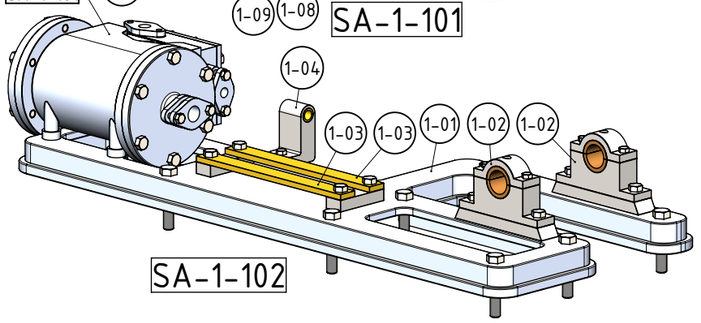

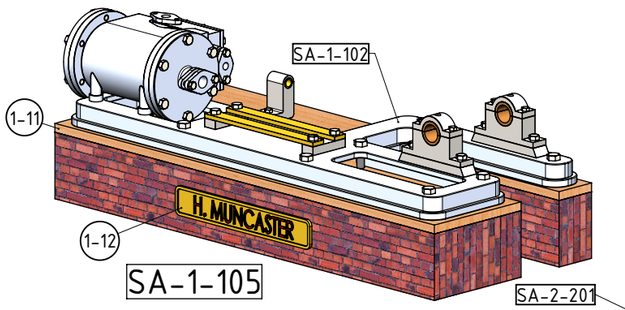

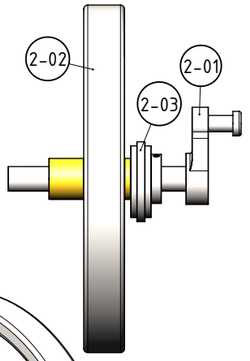

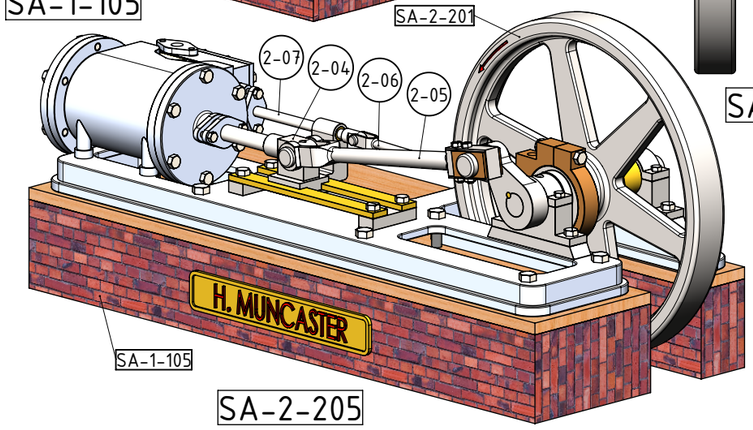

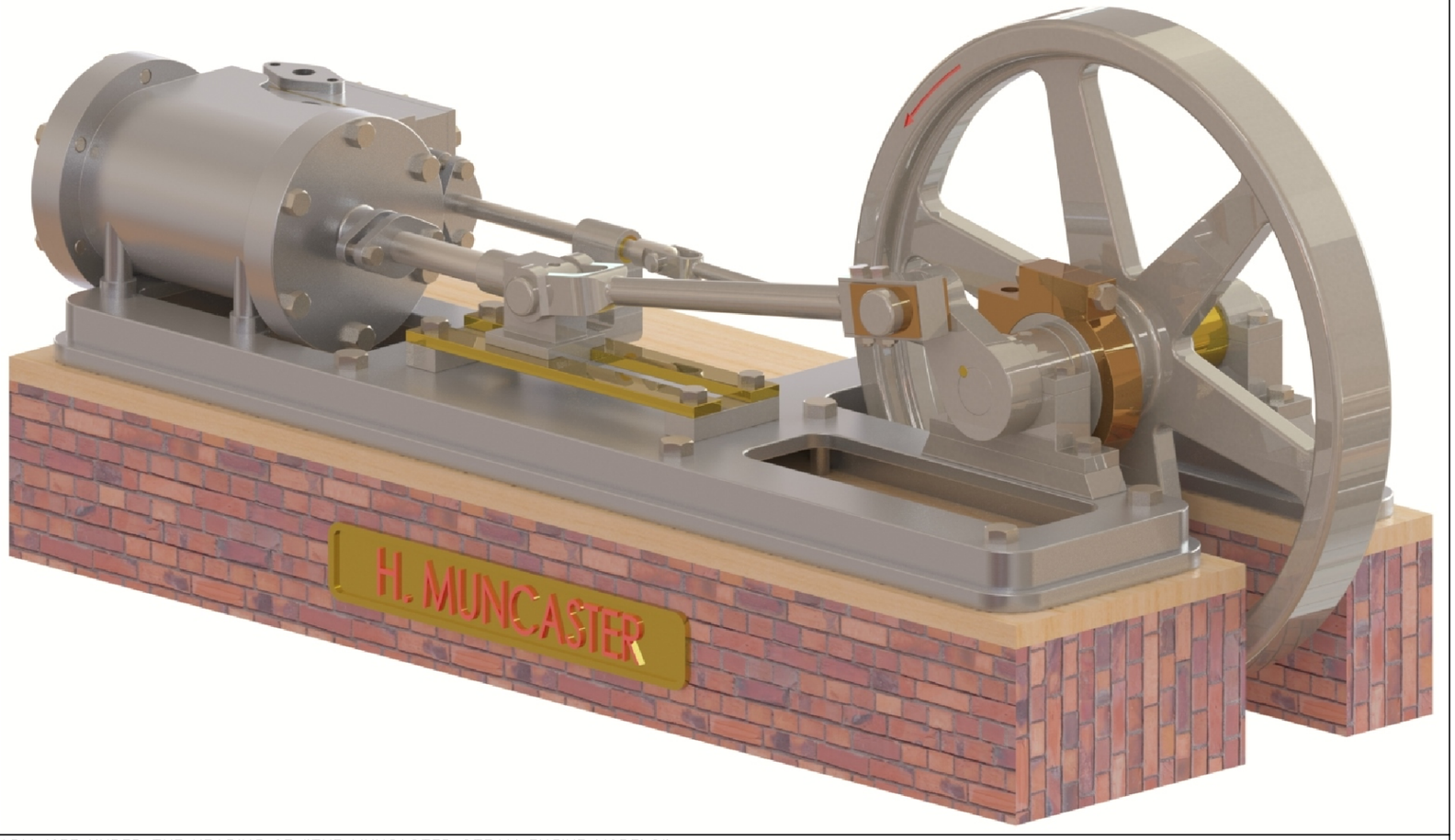

NOTES: THE ORIGINAL DRAWINGS WERE PUBLISHED IN THE "MODEL ENGINEER" MAGAZINE OF FEBTUARY 1957 UNDER THE HEADING OF "THE MUNCASTER STEAM-ENGINE MODELS".

TITLE
1 CYL HORIZONTAL MILL STEAM ENGINE WITH BAR CROSSHEAD SLIDES BY H.MUNCASTER.

DRAWING CONTENTS
RENDERED PICTURE, PARTS AND ASSEMBLIES

PROJECT No 11-04-01

JDW DRAUGHTING SERVICES
J.A.M. DE WAAL. 12 BRIGHTWELL STREET PAPAKURA 2110. NEW ZEALAND. PHONE: 0064 09 2988815. MOB: 0211791000
E-MAIL: dewaal@xtra.co.nz.

PROJECTION JDWDS
DATE APRIL-2017
SHEET: 03 OF 03

MODEL SCALE: 1:1
DWG SCALE: 1:1 @A3 OR AS SHOWN
Copyright © J.A.M. DE WAAL PAPAKURA NZ
A3 No:MUNCASTER4.1-03

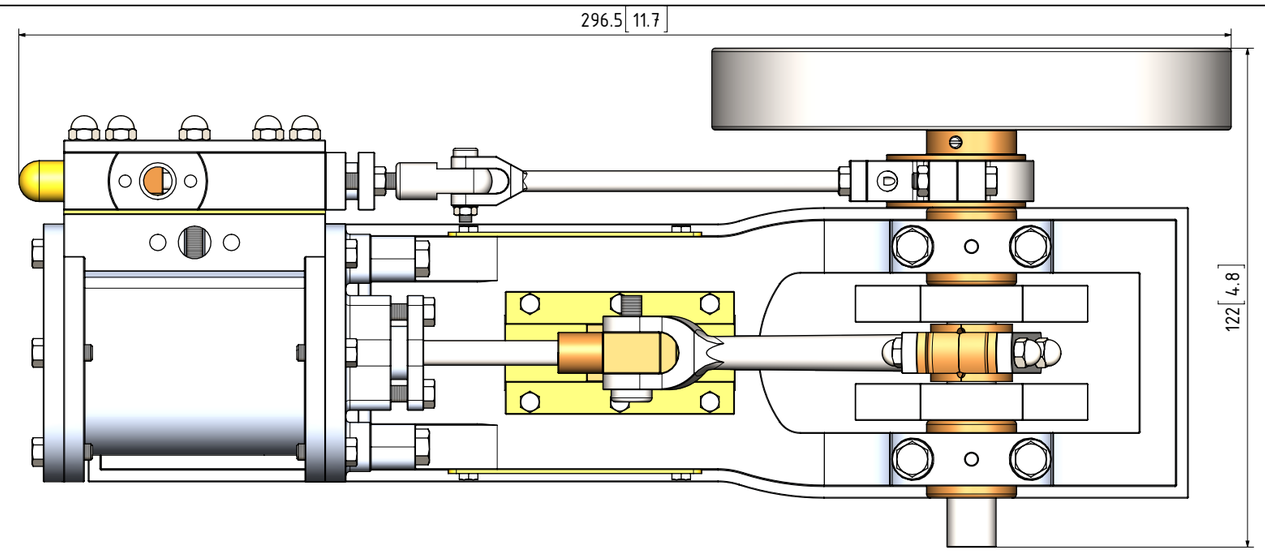

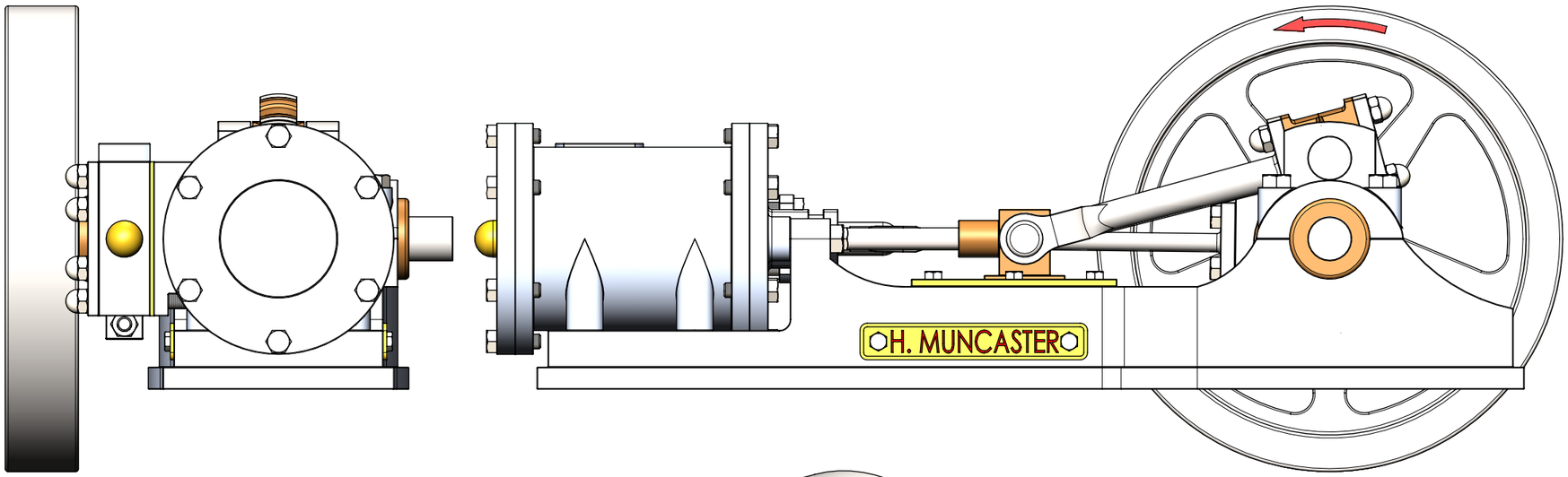

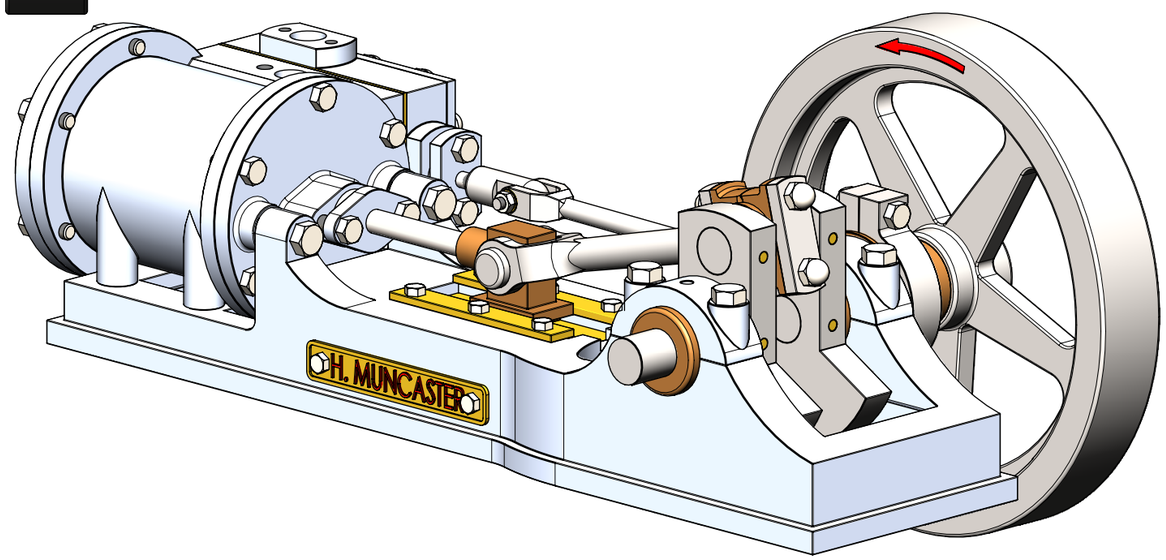

NOTES:
0. ALL DRAWINGS ARE IN METRIC MEASUREMENTS
1. ALL ENGINEERING PRACTICES SHALL BE APPLIED WITH REGARDS TO HOLE AND SHAFT TOLERANCES.
2. WHERE SCREWS OR BOLTS ARE USED THE CLEARANCE HOLES SHALL BE APPROXIMATELY 5% TO 8% LARGER THAN THE MATCHING TAPPED HOLE.
3. PREFERABLY ALL TAPPED HOLES AND MATCHING SCREWS AND/OR BOLTS TO BE METRIC FINE (MF)
4. MATERIALS SPECIFIED ON THE DRAWINGS ARE INDICATIVE ONLY. THE BUILDER CAN MAKE HIS/HER OWN MATERIAL CHOICE.
5. ALL CONNECTIONS/JOINTS WHICH HAVE STEAM PRESSURE APPLIED TO IT SHALL BE SILVER/HARD SOLDERED.
6. COMPRESSION SPRINGS ARE DRAWN IN COMPRESSED STATE (CP), UNCOMPRESSED STATE IS APPROX 40% TO 60% LONGER THEN COMPRESSED STATE.
7. WHERE PREFERRED SCREW OR RIVETED CONNECTIONS CAN BE OMITTED AND PARTS CAN BE BONDED TOGETHER BY USING EITHER HIGH STRENGTH GLUE, EPOXY RESIN, OR SOLDER.
8. PARTS WHICH ARE DIRECTLY EXPOSED TO STEAM AND/OR WATER SHOULD BE CONSTRUCTED USING NON-FERROUS OR NON CORROSIVE MATERIAL SUCH AS BRASS, BRONZE, GUNMETAL, STAINLESS STEEL, COPPER OR MONEL.
9. THE ORDER IN WHICH THE PARTS/COMPONENTS ARE MANUFACTURED AND THE MODEL IS ASSEMBLED IS ENTIRELY LEFT TO THE BUILDER/MODEL MAKER.
10. A COLOUR SCHEME FOR THIS PROJECT IS ENTIRELY LEFT UP TO THE MODEL MAKER.
11. THE MANNER IN WHICH THE PARTS/COMPONENTS ARE MANUFACTURED IS ENTIRELY LEFT UP TO THE BUILDER.
12. USE LOCTITE, ON SCREW OR PRESS FIT CONNECTIONS OR SURFACES, WERE DEEMED NECESSARY TO PREVENT PARTS FROM LOOSENING.
13. WASHER SHALL BE USED WHERE DEEMED NECESSARY.
XX. ERRORS AND/OR OMISSIONS MAY OCCUR IN THE DRAWINGS, DO NOT HESITATE TO CONTACT ME SO THAT THE ERRORS/OMISSIONS CAN BE RECTIFIED.

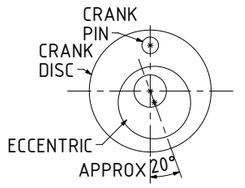

THE OFF SET ANGLE OF THE ECCENTRIC IN RELATION TO THE CRANK AXIS TO BE EXPERIMENTALLY DETERMINED FOR THE SMOOTH RUNNING OF THE ENGINE AND SATISFACTION OF THE BUILDER

OTHER ABBREVIATIONS
DP = DEEP
DAA= DRILL AFTER ASSEMBLY
D&TAA= DRILL AND TAP AFTER ASSEMBLY
CF = CLOSE FIT (SIZE FOR SIZE)
PF = PRESS FIT
PFAA= PRESS FIT AFTER ASSEMBLY
PCD = PITCH CIRCLE DIAMETER
RM = REAM
HEX = HEXACON, 6SIDED
CP = COMPRESSED
KNL = KNURLED
CSK = COUNTERSINK
PL = PLACES
DWL= DOWEL
(T)HESOP=(TAPPED)HOLES EQUALLY SPACED ON PCD
(T)HESOC=(TAPPED)HOLES EQUALLY SPACED ON CIRCUMFERENCE
SA-xxx = SUB ASSEMBLY-xxx

MATERIAL ABBREVIATIONS:
ALU = ALUMINIUM/HARD ALUMINIUM
BRS = BRASS
BRZ = BRONZE OR GUNMETAL (BRZ/GM)
CI = CAST IRON
CU = COPPER
GRA = GRAPHITE
MS = MILD STEEL/BRIGHT MILD STEEL
S/S = SILVER STEEL OR STAINLESS STEEL
SPS = SPRING STEEL
PEEK= POLYETHER ETHER KETONE
SYN = SYNTHETIC MATERIAL SUCH AS VETON, NYLON, TEFLON OR RUBBER
IN GENERAL SYNTHETIC MATERIALS SOULD BE ABLE TO WITHSTAND THE HEAT AND PRESSURE(S) APPLIED TO THEM.
nnn/nnn MEANS THAT EITHER MATERIAL CAN BE USED

QTY.	PART NUMBER
1	MUNCASTER4.2-1-01-BASE BEDPLATE
2	MUNCASTER4.2-1-02-BEARING CAP
2	MUNCASTER4.2-1-03-MAIN BEARING
1	MUNCASTER4.2-1-04-CROSSHEAD LOWER SLIDE PLATE
2	MUNCASTER4.2-1-05-CROSSHEAD UPPER SLIDE PLATE
1	MUNCASTER4.2-1-06-CYLINDER
1	MUNCASTER4.2-1-07-CYLINDER FRONT COVER
1	MUNCASTER4.2-1-08-CYLINDER REAR COVER
1	MUNCASTER4.2-1-09-SLIDE VALVE PORT PLATE
1	MUNCASTER4.2-1-10-VALVE CHEST
1	MUNCASTER4.2-1-11-VALVE CHEST COVER
2	MUNCASTER4.2-1-12-NAME PLATE
1	MUNCASTER4.2-2-01-CRANKSHAFT
1	MUNCASTER4.2-2-02-FLYWHEEL
1	MUNCASTER4.2-2-03-ECCENTRIC SHEAVE
1	MUNCASTER4.2-2-04-PISTON+CROSSHEAD
1	MUNCASTER4.2-2-05-CON-ROD
1	MUNCASTER4.2-2-06-SLIDE VALVE+SPINDLE
1	MUNCASTER4.2-2-07-ECCENTRIC STRAP
1	MUNCASTER4.2-M3 NUT
1	MUNCASTER4.2-M3 WASHER
2	MUNCASTER4.2-M3x3 A-K GRUB SCREW
2	MUNCASTER4.2-M3x6 GRUB SREW
10	MUNCASTER4.2-M3x8 HEX BOLT
14	MUNCASTER4.2-M4 DOME NUT
2	MUNCASTER4.2-M4 NUT
2	MUNCASTER4.2-M4x8 HEX BOLT
18	MUNCASTER4.2-M4x12 HEX BOLT
2	MUNCASTER4.2-M4x16 HEX BOLT
2	MUNCASTER4.2-M4x18 HEX BOLT
12	MUNCASTER4.2-M4x34 STUD
2	MUNCASTER4.2-M5x16 HEX BOLT
4	MUNCASTER4.2-M5x26 HEX BOLT

NOTES: THE ORIGINAL DRAWINGS WERE PUBLISHED IN THE "MODEL ENGINEER" MAGAZINE OF FEBTUARY 1957 UNDER THE HEADING OF "THE MUNCASTER STEAM-ENGINE MODELS".

TITLE
1 CYL HORIZONTAL MILL STEAM ENGINE WITH A SLIPPER CROSSHEAD BY H.MUNCASTER.

DRAWING CONTENTS
G.A., B.O.M., NOTES, ISOMETRIC VIEW

PROJECT No 11-04-02

JDW DRAUGHTING SERVICES
J.A.M. DE WAAL. 12 BRIGHTWELL STREET PAPAKURA 2110. NEW ZEALAND. PHONE: 0064 09 2988815. MOB: 0211791000
E-MAIL: dewaal@xtra.co.nz.

PROJECTION JDWDS
DATE APRIL-2017
SHEET: 01 OF 03

MODEL SCALE: 1:1
DWG SCALE: 1:1 @A3 OR AS SHOWN
Copyright © J.A.M. DE WAAL PAPAKURA NZ
A3 No:MUNCASTER4.2-01

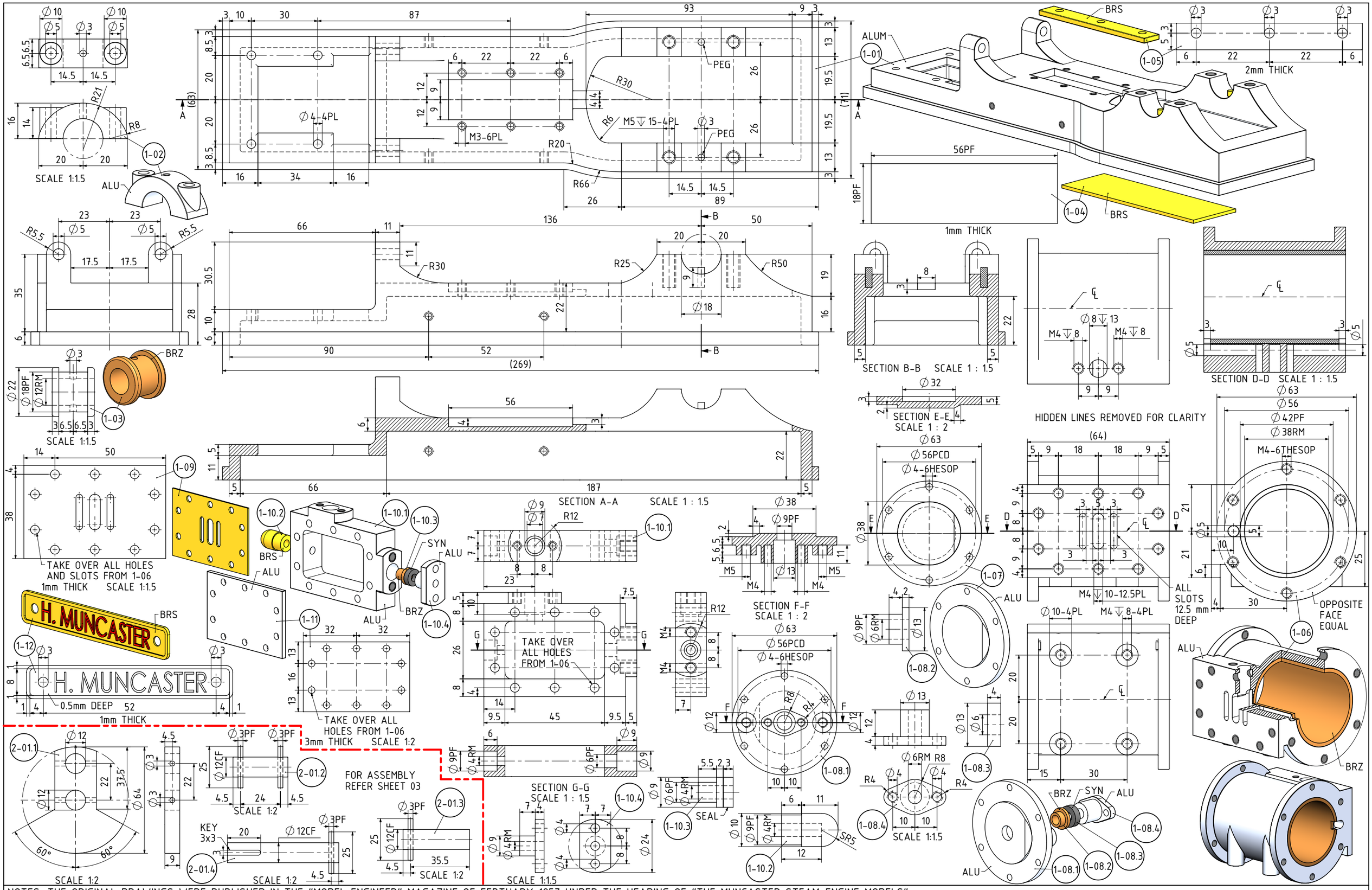

NOTES: THE ORIGINAL DRAWINGS WERE PUBLISHED IN THE "MODEL ENGINEER" MAGAZINE OF FEBTUARY 1957 UNDER THE HEADING OF "THE MUNCASTER STEAM-ENGINE MODELS".

TITLE	DRAWING CONTENTS			
1 CYL HORIZONTAL MILL STEAM ENGINE WITH A SLIPPER CROSSHEAD BY H.MUNCASTER.	PARTS AND ASSEMBLIES	PROJECT No 11-04-02 JDW DRAUGHTING SERVICES J.A.M. DE WAAL. 12 BRIGHTWELL STREET PAPAKURA 2110. NEW ZEALAND. PHONE: 0064 09 2988815. MOB: 0211791000 E-MAIL: dewaal@xtra.co.nz.	PROJECTION JDWDS DATE APRIL-2017 SHEET: 02 OF 03	MODEL SCALE: 1:1 DWG SCALE: 1:1 @A3 OR AS SHOWN Copyright © J.A.M. DE WAAL PAPAKURA NZ A3 No:MUNCASTER4.2-02

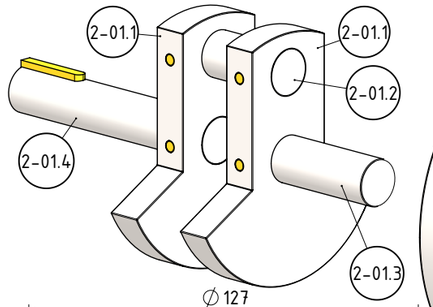

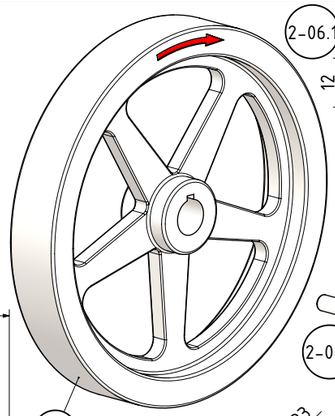

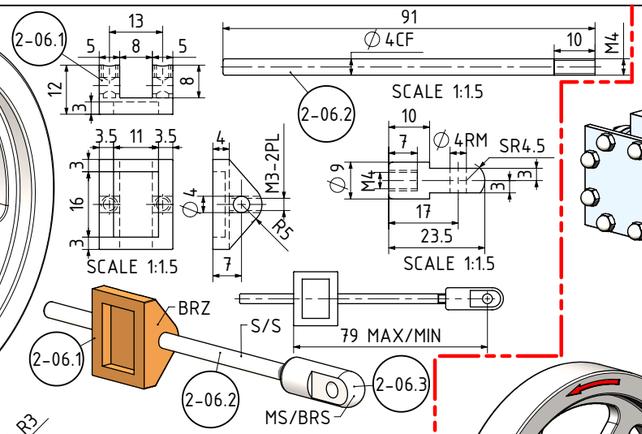

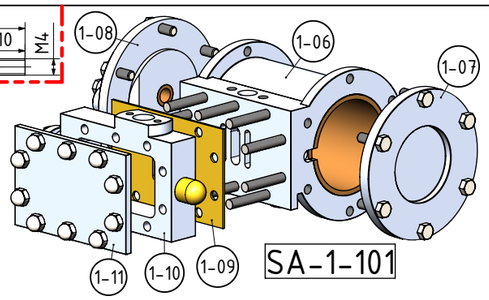

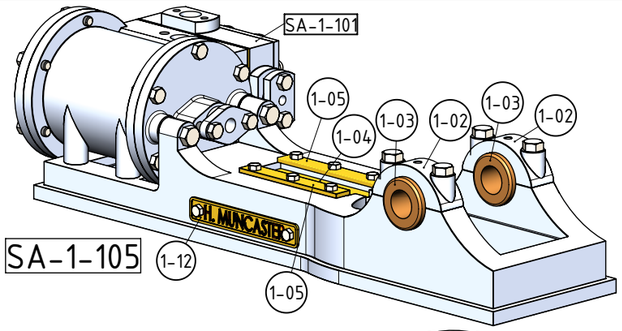

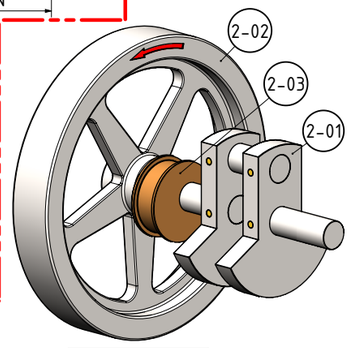

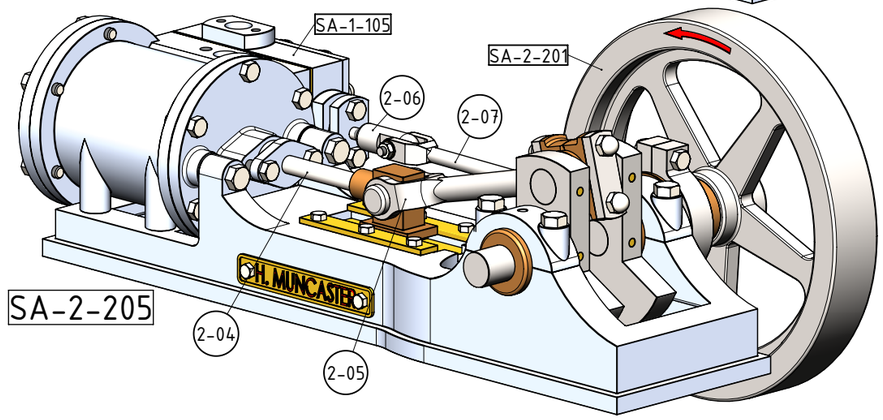

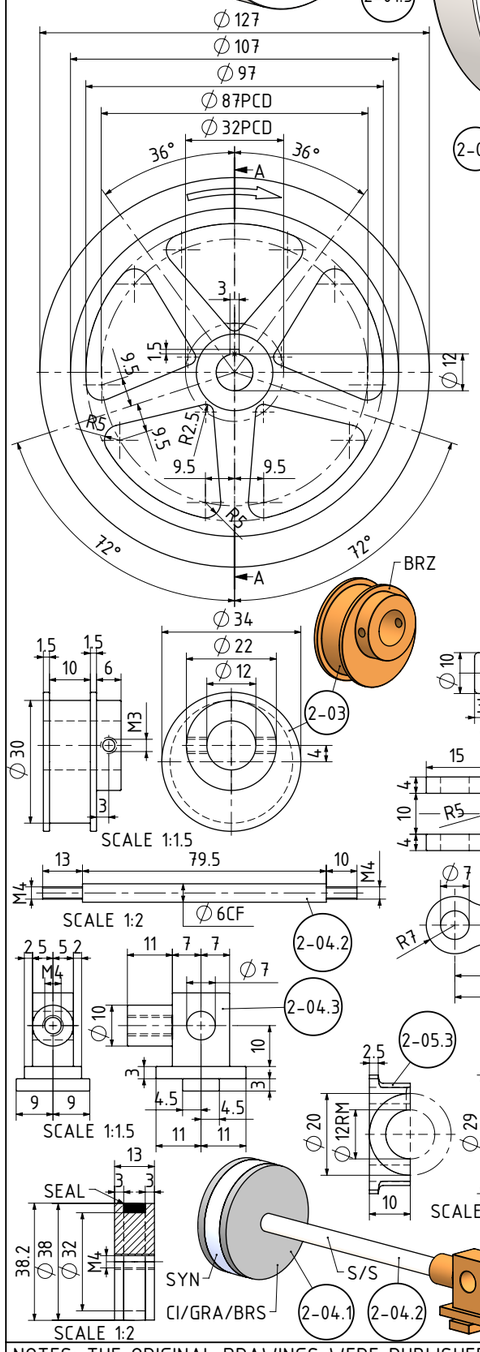

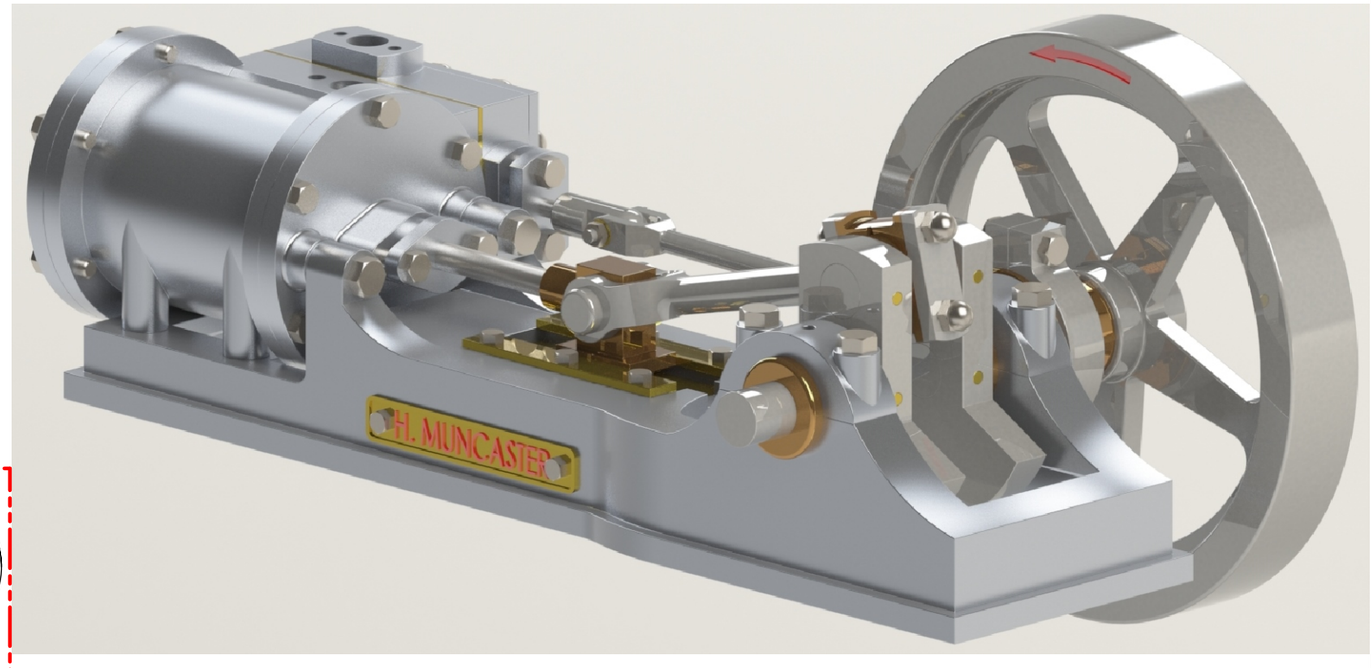

NOTES: THE ORIGINAL DRAWINGS WERE PUBLISHED IN THE "MODEL ENGINEER" MAGAZINE OF FEBTUARY 1957 UNDER THE HEADING OF "THE MUNCASTER STEAM-ENGINE MODELS".

TITLE

1 CYL HORIZONTAL MILL STEAM ENGINE WITH A SLIPPER CROSSHEAD BY H.MUNCASTER.

DRAWING CONTENTS

PARTS AND ASSEMBLIES

PROJECT No 11-04-02

JDW DRAUGHTING SERVICES

J.A.M. DE WAAL. 12 BRIGHTWELL STREET PAPAKURA 2110. NEW ZEALAND. PHONE: 0064 09 2988815. MOB: 0211791000 E-MAIL: dewaal@xtra.co.nz.

PROJECTION JDWDS

DATE APRIL-2017

SHEET: 03 OF 03

MODEL SCALE: 1:1

DWG SCALE: 1:1 @A3 OR AS SHOWN

Copyright © J.A.M. DE WAAL PAPAKURA NZ

A3 No:MUNCASTER4.2-03

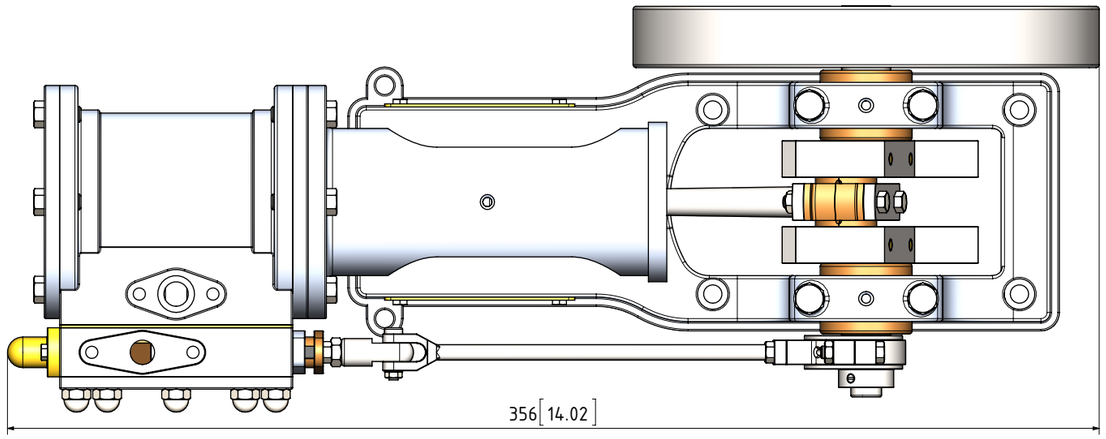

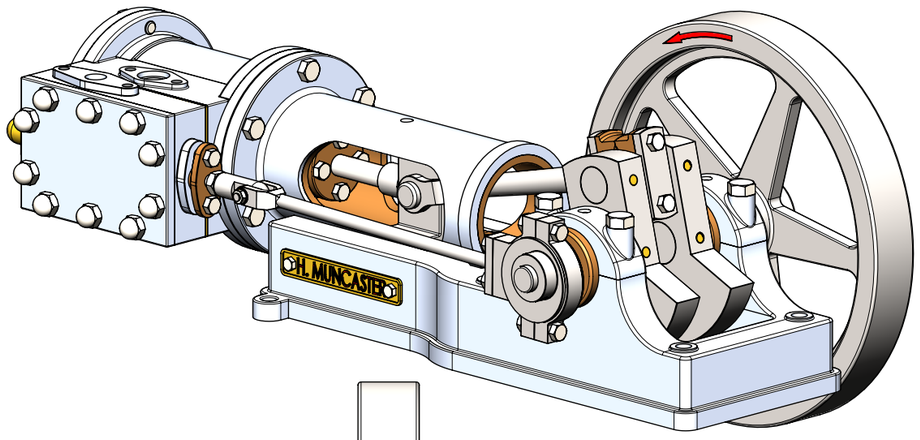

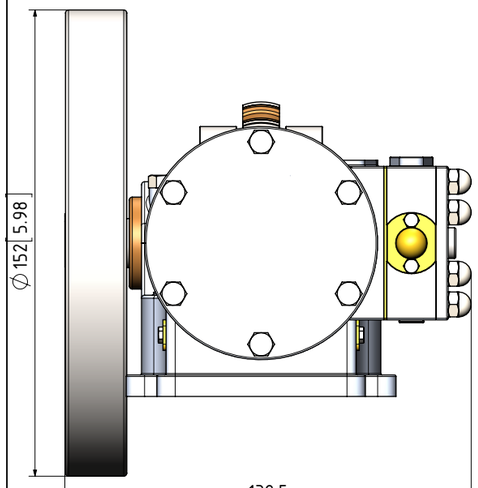

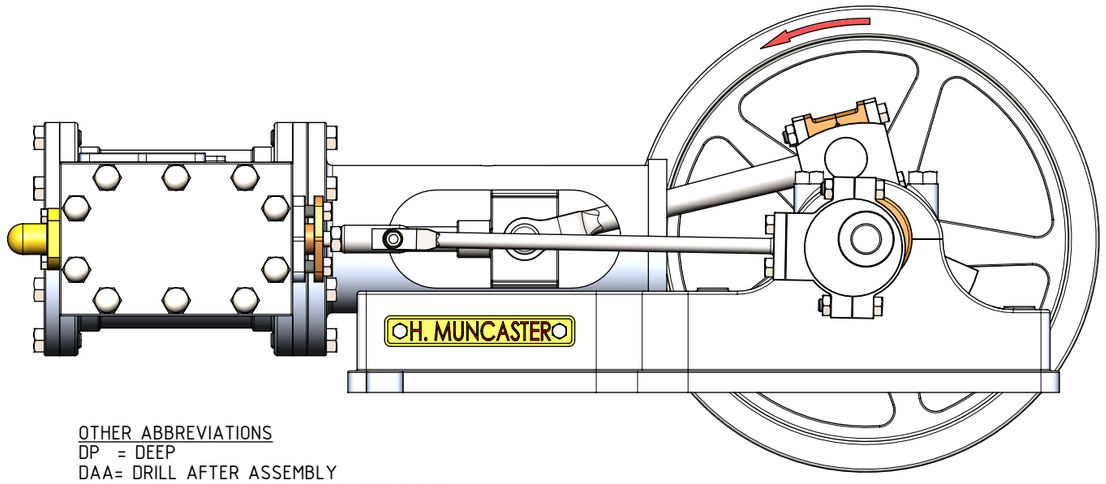

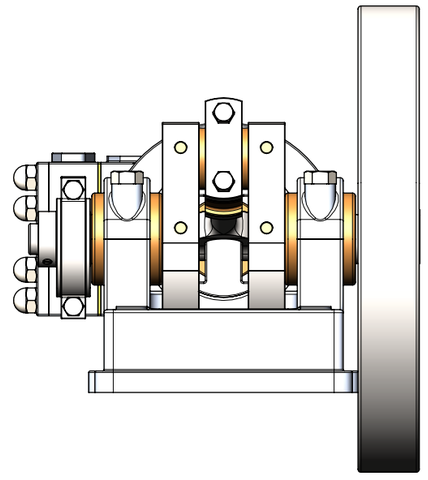

THE OFF SET ANGLE OF THE ECCENTRIC IN RELATION TO THE CRANK AXIS TO BE EXPERIMENTALLY DETERMINED FOR THE SMOOTH RUNNING OF THE ENGINE AND SATISFACTION OF THE BUILDER

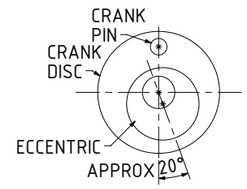

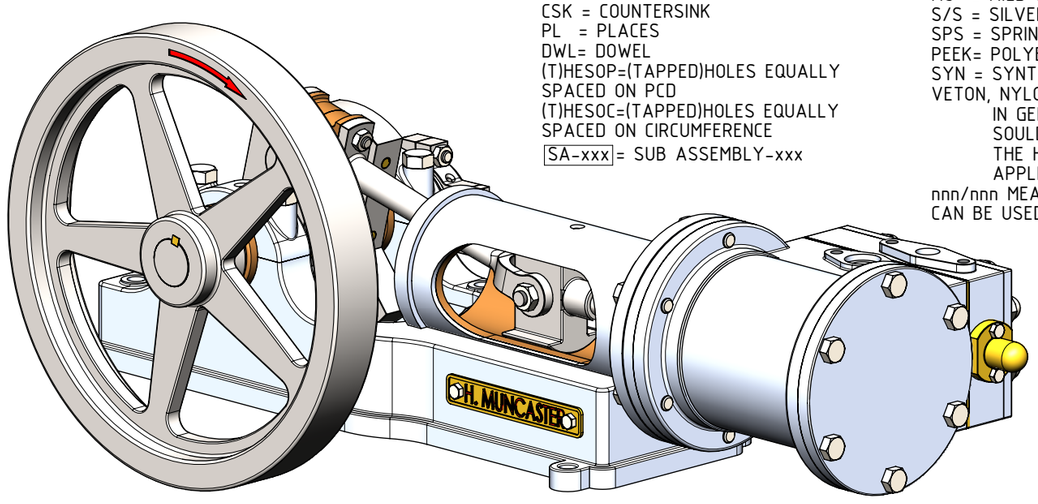

OTHER ABBREVIATIONS
DP = DEEP
DAA= DRILL AFTER ASSEMBLY
D&TAA= DRILL AND TAP AFTER ASSEMBLY
CF = CLOSE FIT (SIZE FOR SIZE)
PF = PRESS FIT
PFAA= PRESS FIT AFTER ASSEMBLY
PCD = PITCH CIRCLE DIAMETER
RM = REAM
HEX = HEXACON, 6SIDED
CP = COMPRESSED
KNL = KNURLED
CSK = COUNTERSINK
PL = PLACES
DWL= DOWEL
(T)HESOP=(TAPPED)HOLES EQUALLY SPACED ON PCD
(T)HESOC=(TAPPED)HOLES EQUALLY SPACED ON CIRCUMFERENCE
SA-xxx = SUB ASSEMBLY-xxx

MATERIAL ABBREVIATIONS:
ALU = ALUMINIUM/HARD ALUMINIUM
BRS = BRASS
BRZ = BRONZE OR GUNMETAL (BRZ/GM)
CI = CAST IRON
CU = COPPER
GRA = GRAPHITE
MS = MILD STEEL/BRIGHT MILD STEEL
S/S = SILVER STEEL OR STAINLESS STEEL
SPS = SPRING STEEL
PEEK= POLYETHER ETHER KETONE
SYN = SYNTHETIC MATERIAL SUCH AS VETON, NYLON, TEFLON OR RUBBER IN GENERAL SYNTHETIC MATERIALS SOULD BE ABLE TO WITHSTAND THE HEAT AND PRESSURE(S) APPLIED TO THEM.
nnn/nnn MEANS THAT EITHER MATERIAL CAN BE USED

NOTES:
0. ALL DRAWINGS ARE IN METRIC MEASUREMENTS
1. ALL ENGINEERING PRACTICES SHALL BE APPLIED WITH REGARDS TO HOLE AND SHAFT TOLERANCES.
2. WHERE SCREWS OR BOLTS ARE USED THE CLEARANCE HOLES SHALL BE APPROXIMATELY 5% TO 8% LARGER THAN THE MATCHING TAPPED HOLE.
3. PREFERABLY ALL TAPPED HOLES AND MATCHING SCREWS AND/OR BOLTS TO BE METRIC FINE (MF)
4. MATERIALS SPECIFIED ON THE DRAWINGS ARE INDICATIVE ONLY. THE BUILDER CAN MAKE HIS/HER OWN MATERIAL CHOICE.
5. ALL CONNECTIONS/JOINTS WHICH HAVE STEAM PRESSURE APPLIED TO IT SHALL BE SILVER/HARD SOLDERED.
6. COMPRESSION SPRINGS ARE DRAWN IN COMPRESSED STATE (CP), UNCOMPRESSED STATE IS APPROX 40% TO 60% LONGER THEN COMPRESSED STATE.
7. WHERE PREFERRED SCREW OR RIVETED CONNECTIONS CAN BE OMITTED AND PARTS CAN BE BONDED TOGETHER BY USING EITHER HIGH STRENGTH GLUE, EPOXY RESIN, OR SOLDER.
8. PARTS WHICH ARE DIRECTLY EXPOSED TO STEAM AND/OR WATER SHOULD BE CONSTRUCTED USING NON-FERROUS OR NON CORROSIVE MATERIAL SUCH AS BRASS, BRONZE, GUNMETAL, STAINLESS STEEL, COPPER OR MONEL.
9. THE ORDER IN WHICH THE PARTS/COMPONENTS ARE MANUFACTURED AND THE MODEL IS ASSEMBLED IS ENTIRELY LEFT TO THE BUILDER/MODEL MAKER.
10. A COLOUR SCHEME FOR THIS PROJECT IS ENTIRELY LEFT UP TO THE MODEL MAKER.
11. THE MANNER IN WHICH THE PARTS/COMPONENTS ARE MANUFACTURED IS ENTIRELY LEFT UP TO THE BUILDER.
12. USE LOCTITE, ON SCREW OR PRESS FIT CONNECTIONS OR SURFACES, WERE DEEMED NECESSARY TO PREVENT PARTS FROM LOOSENING.
13. WASHER SHALL BE USED WHERE DEEMED NECESSARY.
XX. ERRORS AND/OR OMISSIONS MAY OCCUR IN THE DRAWINGS, DO NOT HESITATE TO CONTACT ME SO THAT THE ERRORS/OMISSIONS CAN BE RECTIFIED.

QTY.	PART NUMBER
1	MUNCASTER4.3-1-01-BEDPLATE
2	MUNCASTER4.3-1-02-BEARING CAP
2	MUNCASTER4.3-1-03-CRANK SHAFT BEARING
1	MUNCASTER4.3-1-04-CROSSHEAD TRUNK GUIDE
1	MUNCASTER4.3-1-05-CYLINDER BLOCK
1	MUNCASTER4.3-1-06-CYLINDER BLOCK FRONT COVER
1	MUNCASTER4.3-1-07-CYLINDER BLOCK REAR COVER
1	MUNCASTER4.3-1-08-PORT PLATE
1	MUNCASTER4.3-1-09-VALVE CHEST
1	MUNCASTER4.3-1-10-VALVE CHEST COVER
2	MUNCASTER4.3-1-11-NAME PLATE
1	MUNCASTER4.3-2-01-CRANKSHAFT
1	MUNCASTER4.3-2-02-FLYWHEEL
1	MUNCASTER4.3-2-03-ECCENTRIC SHEAVE
1	MUNCASTER4.3-2-04-PISTON+CROSSHEAD
1	MUNCASTER4.3-2-05-CON-ROD
1	MUNCASTER4.3-2-06-SLIDE VALVE+SPINDLE
1	MUNCASTER4.3-2-07-ECCENTRIC STRAP
1	MUNCASTER4.3-M3 NUT
1	MUNCASTER4.3-M3 WASHER
4	MUNCASTER4.3-M3x4 GRUB SREW
6	MUNCASTER4.3-M3x6 HEX BOLT
4	MUNCASTER4.3-M4 NUT
2	MUNCASTER4.3-M4x8 HEX BOLT
6	MUNCASTER4.3-M4x16 HEX BOLT
2	MUNCASTER4.3-M4x18 HEX BOLT
2	MUNCASTER4.3-M4x32 HEX BOLT
10	MUNCASTER4.3-M5 DOME NUT
2	MUNCASTER4.3-M5 NUT
6	MUNCASTER4.3-M5x12 HEX BOLT
6	MUNCASTER4.3-M5x18 HEX BOLT
10	MUNCASTER4.3-M5x34 STUD
4	MUNCASTER4.3-M6x26 HEX BOLT

NOTES: THE ORIGINAL DRAWINGS WERE PUBLISHED IN THE "MODEL ENGINEER" MAGAZINE OF FEBTUARY 1957 UNDER THE HEADING OF "THE MUNCASTER STEAM-ENGINE MODELS".

TITLE
1 CYL HORIZONTAL STEAM ENGINE WITH A CROSSHEAD TRUNK GUIDE BY H.MUNCASTER.

DRAWING CONTENTS
GENERAL ARRANGEMENT, B.O.M., NOTES, ISOMETRIC VIEWS

PROJECT No 11-04-03

JDW DRAUGHTING SERVICES
J.A.M. DE WAAL. 12 BRIGHTWELL STREET PAPAKURA 2110 NEW ZEALAND. PHONE: 0064 09 2988815. MOB: 0211791000
E-MAIL: dewaal@xtra.co.nz.

PROJECTION JDWDS
DATE JUNE-2017
SHEET: 01 OF 03

MODEL SCALE: 1:1
DWG SCALE: 1:1 @A3 OR AS SHOWN
Copyright © J.A.M. DE WAAL PAPAKURA NZ
A3 No:MUNCASTER4.3-01

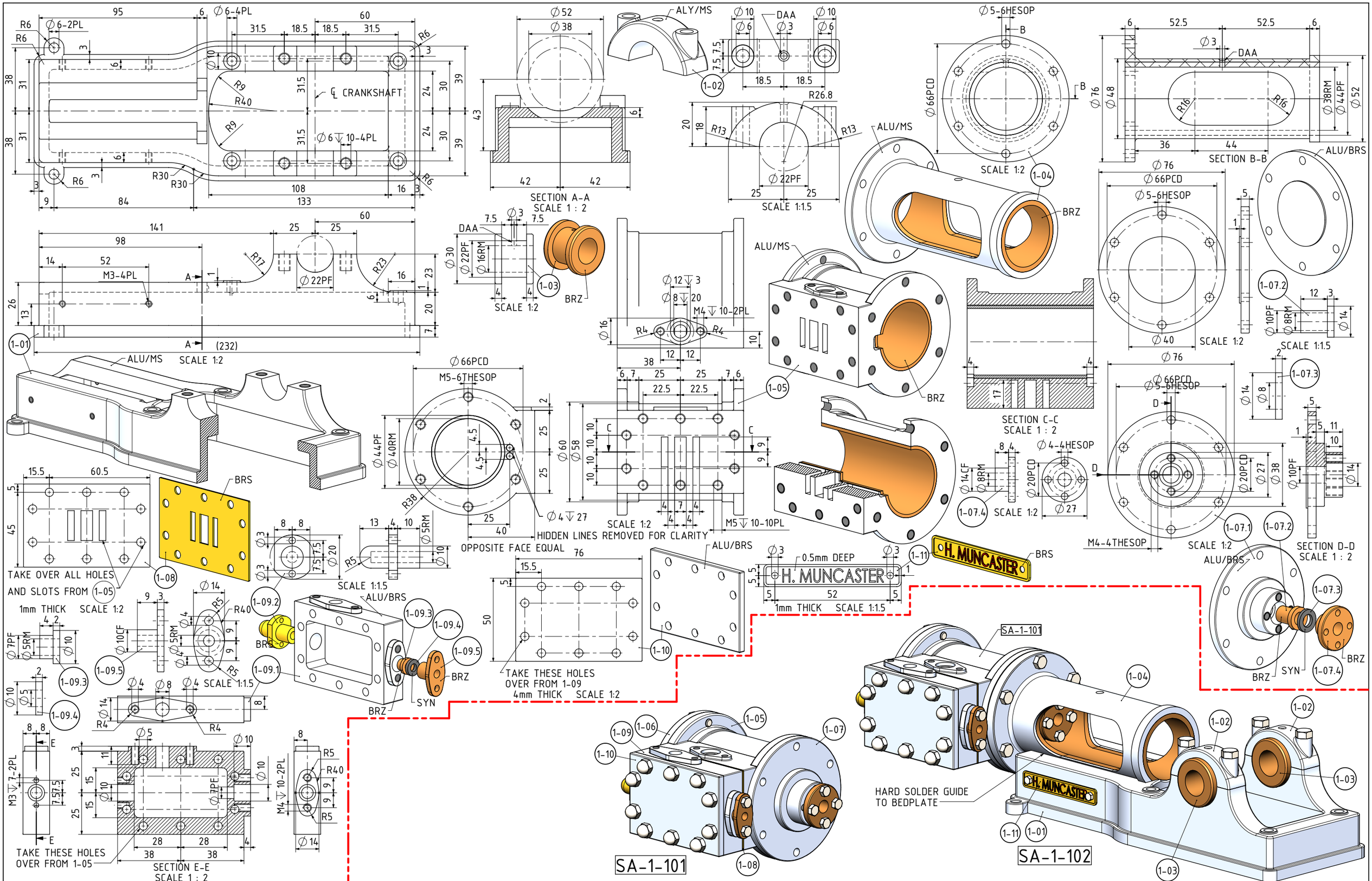

NOTES: THE ORIGINAL DRAWINGS WERE PUBLISHED IN THE "MODEL ENGINEER" MAGAZINE OF FEBTUARY 1957 UNDER THE HEADING OF "THE MUNCASTER STEAM-ENGINE MODELS".

TITLE: 1 CYL HORIZONTAL STEAM ENGINE WITH A CROSSHEAD TRUNK GUIDE BY H.MUNCASTER.	DRAWING CONTENTS: PARTS AND ASSEMBLIES	PROJECT No 11-04-03	MODEL SCALE: 1:1
		JDW DRAUGHTING SERVICES J.A.M. DE WAAL. 12 BRIGHTWELL STREET PAPAKURA 2110. NEW ZEALAND. PHONE: 0064 09 2988815. MOB: 0211791000 E-MAIL: dewaal@xtra.co.nz.	PROJECTION JDWDS DATE JUNE-2017 SHEET: 02 OF 03
			DWG SCALE: 1:1 @A3 OR AS SHOWN Copyright © J.A.M. DE WAAL PAPAKURA NZ A3 No:MUNCASTER4.3-02

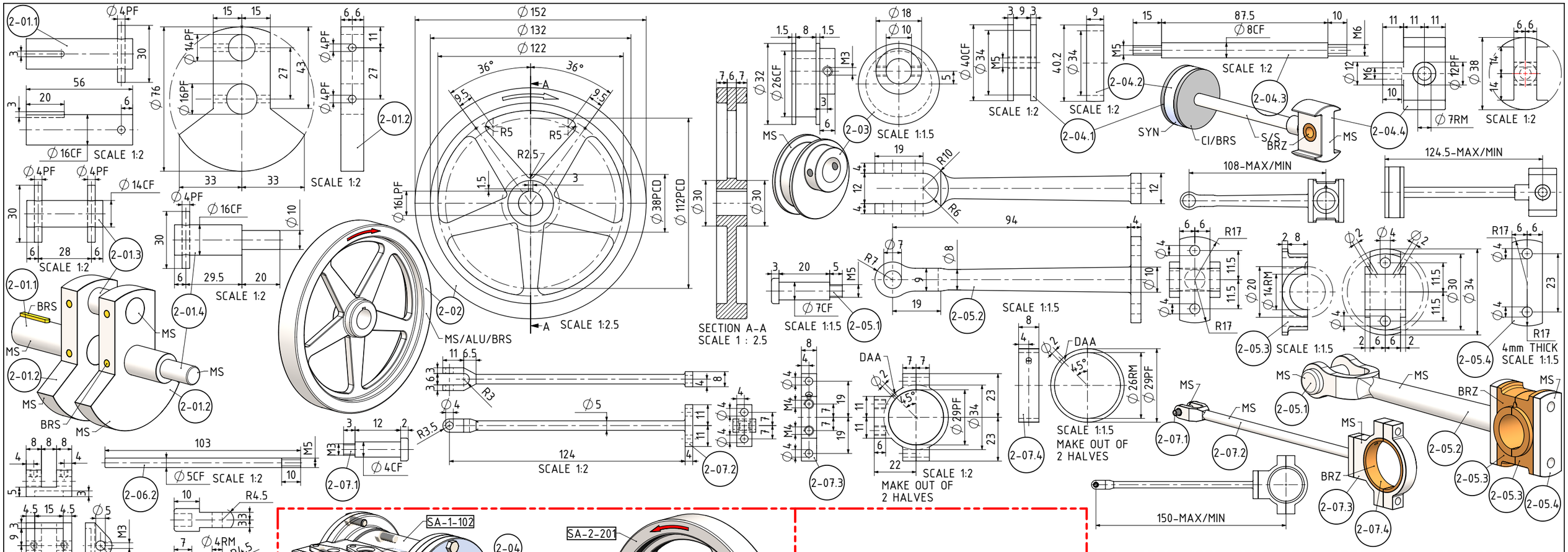

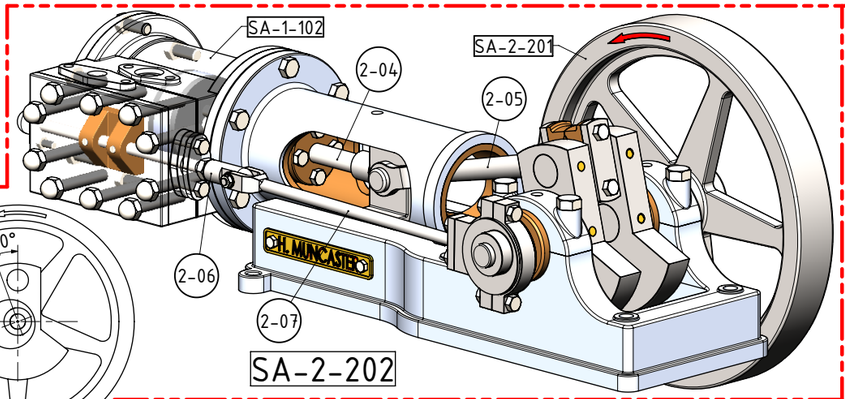

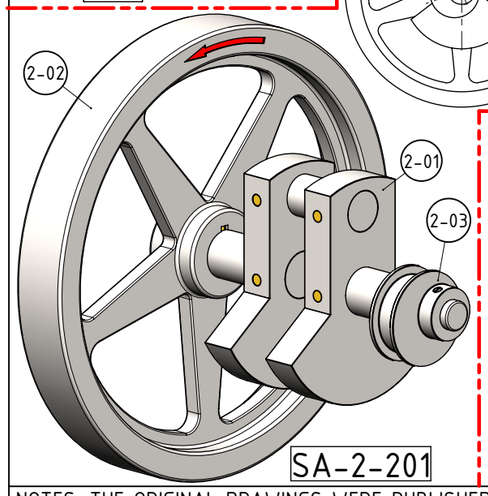

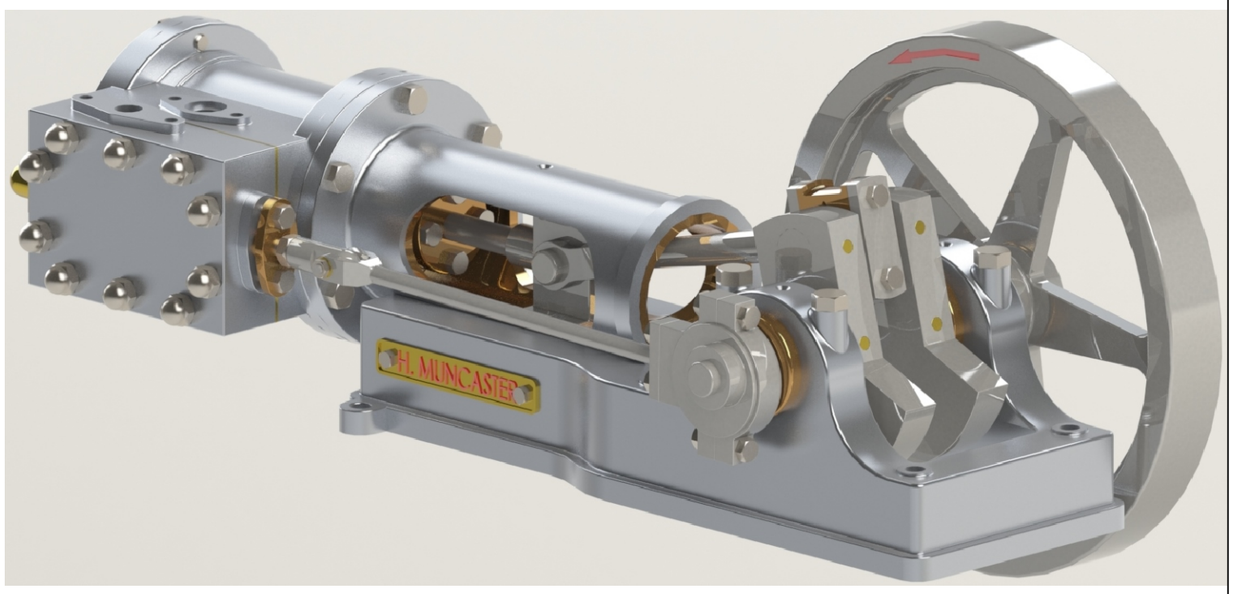

NOTES: THE ORIGINAL DRAWINGS WERE PUBLISHED IN THE "MODEL ENGINEER" MAGAZINE OF FEBTUARY 1957 UNDER THE HEADING OF "THE MUNCASTER STEAM-ENGINE MODELS".

TITLE
1 CYL HORIZONTAL STEAM ENGINE WITH A CROSSHEAD TRUNK GUIDE BY H.MUNCASTER.

DRAWING CONTENTS
PARTS AND ASSEMBLIES

PROJECT No 11-04-03

JDW DRAUGHTING SERVICES
J.A.M. DE WAAL. 12 BRIGHTWELL STREET PAPAKURA 2110.
NEW ZEALAND. PHONE: 0064 09 2988815. MOB: 0211791000
E-MAIL: dewaal@xtra.co.nz.

PROJECTION JDWDS

DATE JUNE-2017

SHEET: 03 OF 03

MODEL SCALE: 1:1

DWG SCALE: 1:1 @A3 OR AS SHOWN

Copyright © J.A.M. DE WAAL PAPAKURA NZ

A3 No:MUNCASTER4.3-03