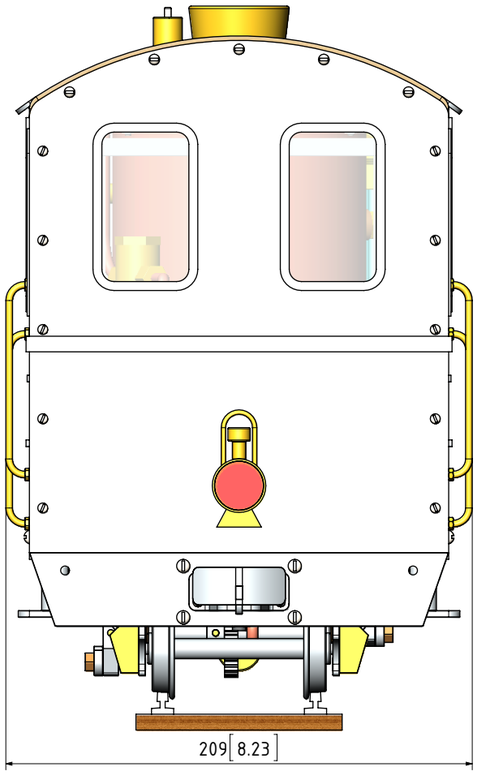

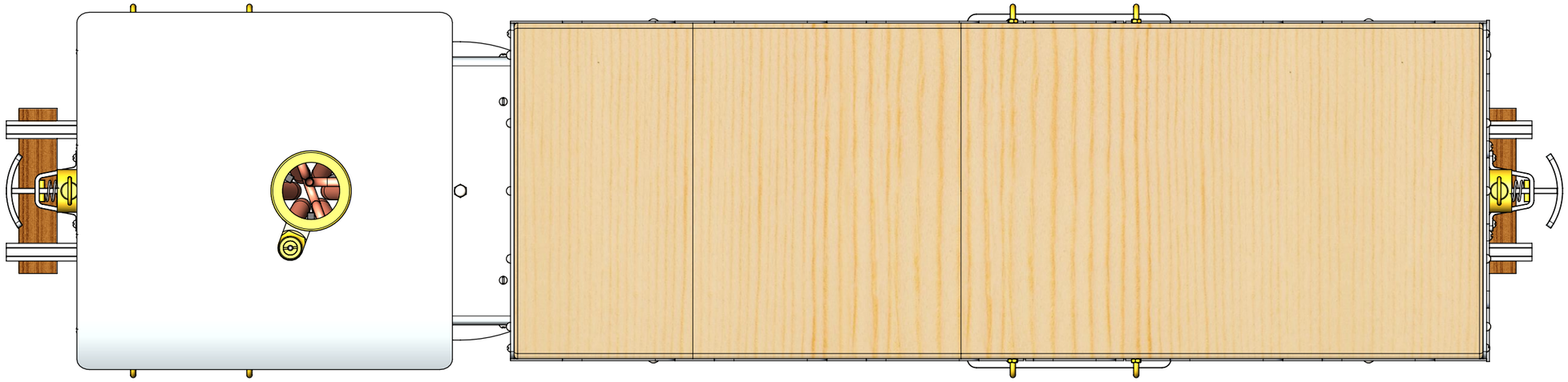

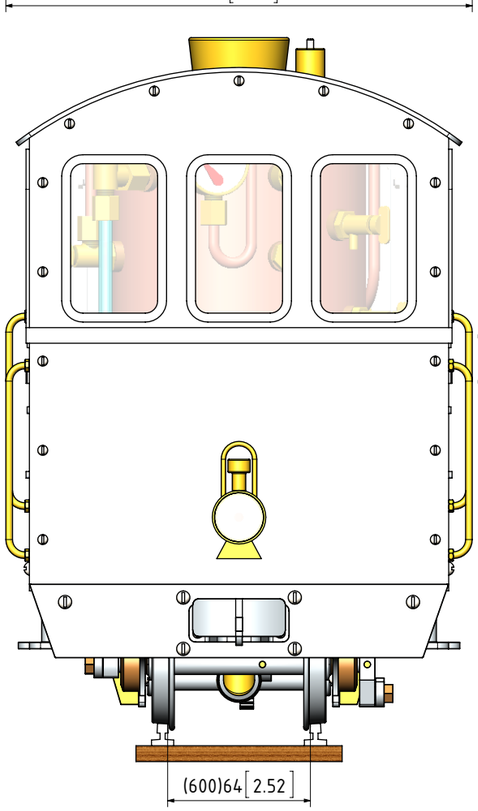

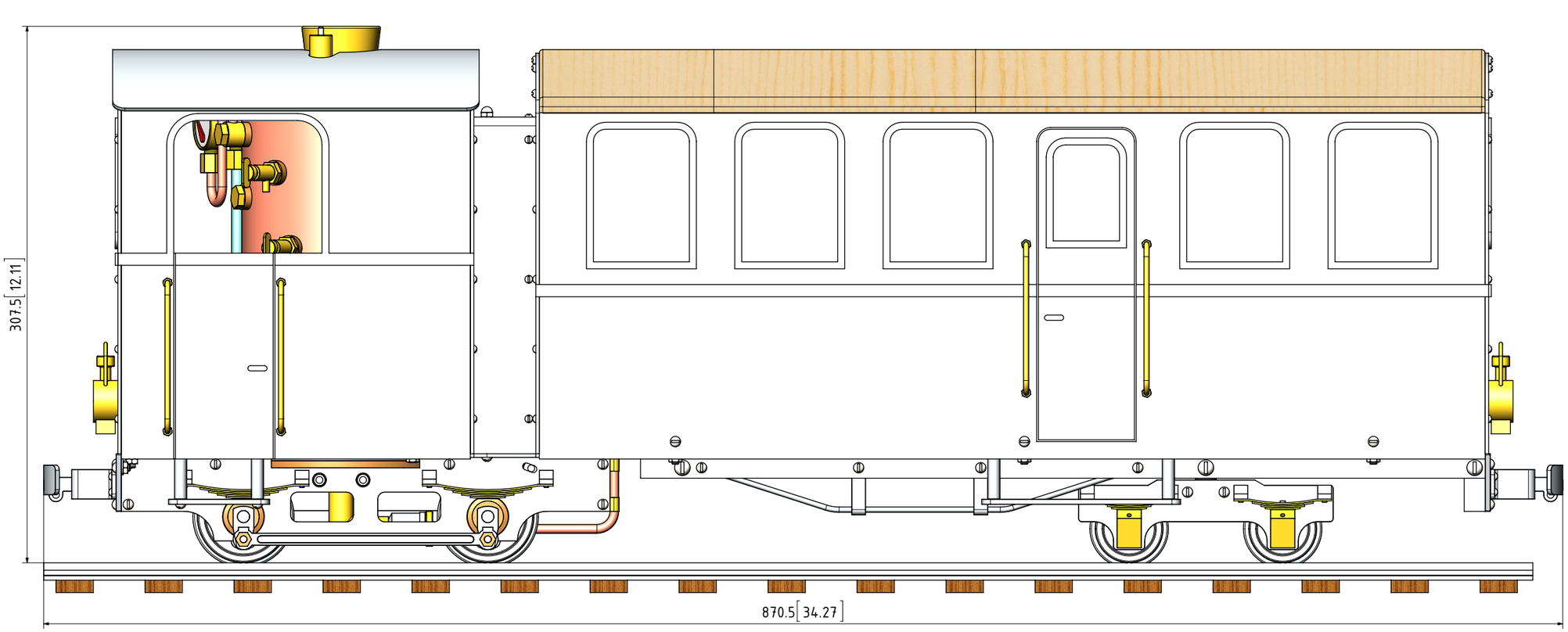

NOTES: THIS ENGINE IS LOOSELY BASED ON THE ORIGINAL DESIGN BY Mr J.P. DUVAL.THE DRAWINGS WERE FOUND THE INTERNET ON THE WEBSITE OF JOHN TOM (www.john-tom.com)

TITLE

MODEL OF A GAS FIRED NARROW GAUGE STEAM RAILCAR FOR 2.5INCH/64mm GAUGE

DRAWING CONTENTS

GENERAL ARRANGEMENT

PROJECT No 07E-17-00

JDW DRAUGHTING SERVICES
J.A.M. DE WAAL. 12 BRIGHTWELL STREET PAPAKURA 2110. NEW ZEALAND. PHONE: 0064 09 2988815. MOB: 0211791000
E-MAIL: dewaal@xtra.co.nz.

PROJECTION JDWDS

DATE MARCH-2018

SHEET: 01 OF 09

MODEL SCALE: 1:9.4

DWG SCALE: 1:1 @A3 OR AS SHOWN

Copyright © J.A.M. DE WAAL PAPAKURA NZ

A3 No: NGRC-64-01

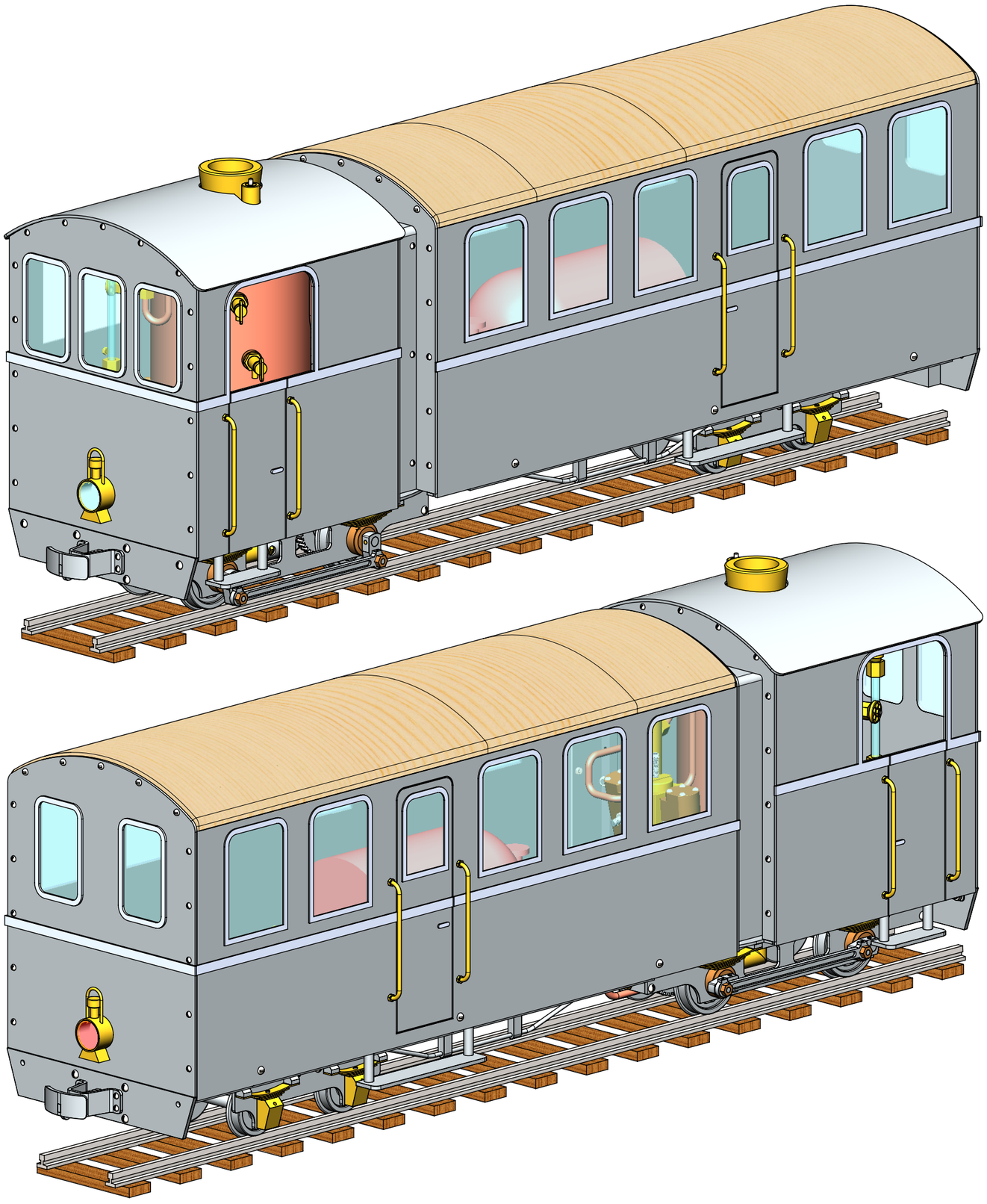

QTY.	PART NUMBER
2	NGRC-64-1-01-SIDE FRAME
4	NGRC-64-1-02-WHEEL BEARING
8	NGRC-64-1-03-LEAFSPRING BEARING BLOCK
4	NGRC-64-1-04-LEAFSPRING
6	NGRC-64-1-05-CROSS BRACE
2	NGRC-64-1-06-FRONT BUFFER BEAM
4	NGRC-64-1-07-SUPPORT ANGLE
2	NGRC-64-1-08-BUFFER HOUSING BRACKET
2	NGRC-64-1-09-BUFFER AND STEM
2	NGRC-64-1-10-BUFFER SPRING
1	NGRC-64-1-11-FOOT PLATE
2	NGRC-64-1-12-CABIN STEP
2	NGRC-64-1-13-CABIN FRAME UPRIGHT
1	NGRC-64-1-14-CABIN FRAME LINTEL
1	NGRC-64-1-15-CABIN UPRIGHT STAY
1	NGRC-64-1-15-CABIN UPRIGHT STAY
1	NGRC-64-1-16-PORT BLOCK BASE PLATE
1	NGRC-64-1-17-PORT BLOCK
2	NGRC-64-1-18-CRANKSHAFT ROLLER BEARING
1	NGRC-64-1-19-CYLINDER PIVOT SHAFT
1	NGRC-64-1-20-EXHAUST PIPE+FLANGE
1	NGRC-64-1-21-STEAM INLET PIPE+FLANGE
1	NGRC-64-1-22-PORT BLOCK CONTROL VALVE
1	NGRC-64-1-23-CONTROL VALVE PRESSURE SPRING
2	NGRC-64-1-23-GAS SUPPLY PIPE FASTENING STRIP
1	NGRC-64-2-01-BOILER SHELL
1	NGRC-64-2-02-BOILER SHELL TOP COVER
5	NGRC-64-2-03-BOILER SHELL NIPPLE
2	NGRC-64-2-04-BOILER SHELL TOP COVER NIPPLE
2	NGRC-64-2-05-ON-OFF VALVE
1	NGRC-64-2-06-BOILER SHELL STOP SCREW
1	NGRC-64-2-07-BOILER SHELL TOP COVER STOP SCREW
1	NGRC-64-2-08-PRESSURE GAUGE PIPE
1	NGRC-64-2-09-PRESSURE GAUGE
4	NGRC-64-2-10-PIPE NUT M8xH11xD5
2	NGRC-64-2-11-WTR. LVL. IND. BOILER CONNECTOR
1	NGRC-64-2-12-WTR. LVL. IND. TOP HOLDER
1	NGRC-64-2-13-WTR. LVL. IND. BOTTOM HOLDER
1	NGRC-64-2-14-WTR. LVL. IND. GLASS TUBE
2	NGRC-64-2-15-WTR. LVL. IND. GLASS TUBE NUT M8xH11xD6
2	NGRC-64-2-16-WTR. LVL. IND. BOILER NUT M10xH13xD7
1	NGRC-64-2-17-WTR. LVL. IND. TOP SCREW COVER
1	NGRC-64-2-18-WTR. LVL. IND. RELIEF VALVE
1	NGRC-64-2-19-SAFETY VALVE
1	NGRC-64-2-20-BOILER INTERNAL STEAM SUPPLY PIPE
1	NGRC-64-2-22-MAIN STEAM SUPPLY VALVE
1	NGRC-64-2-23-STEAM SUPPLY VALVE SPINDLE
1	NGRC-64-2-24-SPINDLE NUT M8xH11xD4.5
1	NGRC-64-2-25-SUPER HEATER PIPE
1	NGRC-64-2-26-DISPLACEMENT OILER
1	NGRC-64-2-27-FIRE BOX
2	NGRC-64-2-28-GAS BURNER REST BAR
1	NGRC-64-3-01-STANDARD CAMPING GAS BURNER
1	NGRC-64-3-01-STANDARD CAMPING GAS BURNER
1	NGRC-64-3-02-ELBOW
1	NGRC-64-3-03-GAS NOZZLE
1	NGRC-64-3-04-GAS NOZZLE HOLDER
1	NGRC-64-4-01-GEAR WHEEL AXLE SPACER
1	NGRC-64-4-02-CRANKSHAFT+FLYWHEEL
2	NGRC-64-4-03-CRANK CHEEK
1	NGRC-64-4-04-IDLER GEAR WHEEL
1	NGRC-64-4-05-WHEELS+AXLE
1	NGRC-64-4-05-WHEELS+AXLE
4	NGRC-64-4-06-WHEEL AXLE CRANK
4	NGRC-64-4-07-COUPLING ROD BEARING
1	NGRC-64-4-08-DRIVEN AXLE GEARWHEEL
2	NGRC-64-4-09-COUPLING ROD
2	NGRC-64-4-10-CYLINDER+COVERS
2	NGRC-64-4-11-PISTON+ROD
2	NGRC-64-4-12-CYLINDER RETENSION SPRING
1	NGRC-64-5-01-CABIN FRONT PANEL
1	NGRC-64-5-02-CABIN SIDE PANEL
1	NGRC-64-5-02-CABIN SIDE PANEL
1	NGRC-64-5-03-CABIN REAR PANEL
1	NGRC-64-5-04-ROOF

QTY.	PART NUMBER
8	NGRC-64-5-05-HAND RAIL
1	NGRC-64-5-06-HEADLAMP
1	NGRC-64-5-06-HEADLAMP
1	NGRC-64-6-01-WAGON UNDER FRAME WORK
1	NGRC-64-6-02-WAGON FLOOR
1	NGRC-64-6-03-WAGON SIDE PANELS
1	NGRC-64-6-03-WAGON SIDE PANELS
1	NGRC-64-6-04-WAGON FRONT PANEL
1	NGRC-64-6-05-WAGON REAR PANEL
1	NGRC-64-6-06-WAGON ROOF
2	NGRC-64-6-07-WAGON STEP
2	NGRC-64-6-08-WAGON U-FRAME STIFFENING BAR
4	NGRC-64-6-09-WAGON U-FRAME STIFFENING BAR BRACKET
1	NGRC-64-6-10-WAGON BOGIE FRAME+AXLE BOX
8	NGRC-64-6-11-LEAFSPRING BEARING BLOCK
4	NGRC-64-6-12-LEAFSPRING
2	NGRC-64-6-13-WHEELS+AXLE
1	NGRC-64-6-14-STANDARD CAMPING GAS BOTTLE
29	NGRC-64-M3 NUT
33	NGRC-64-M3 NUT-BRASS
1	NGRC-64-M3 WASHER
8	NGRC-64-M3x6 C-SINK SCREW
121	NGRC-64-M3x6 ROUND HEAD SCREW
1	NGRC-64-M3x14 GRUB SREW
10	NGRC-64-M3x15-ROUND HEAD WOOD SCREW
1	NGRC-64-M4 DOME NUT
30	NGRC-64-M4 NUT
4	NGRC-64-M4 WASHER
45	NGRC-64-M4x8 ROUND HEAD SCREW
30	NGRC-64-M4x10 ROUND HEAD SCREW
14	NGRC-64-M4x16 ROUND HEAD SCREW
8	NGRC-64-M4x18 ROUND HEAD SCREW
4	NGRC-64-M5 NUT
1	NGRC-64-M6 NUT
6	NGRC-64-M6x24 ROUND HEAD SCREW
1	NGRC-64-M64-RAIL

NOTES:
0. ALL DRAWINGS ARE IN METRIC MEASUREMENTS
1. ALL ENGINEERING PRACTICES SHALL BE APPLIED WITH REGARDS TO HOLE AND SHAFT TOLERANCES.
2. WHERE SCREWS OR BOLTS ARE USED THE CLEARANCE HOLES SHALL BE APPROXIMATELY 5% TO 8% LARGER THAN THE MATCHING TAPPED HOLE.
3. PREFERABLY ALL TAPPED HOLES AND MATCHING SCREWS AND/OR BOLTS TO BE METRIC FINE (MF)
4. MATERIALS SPECIFIED ON THE DRAWINGS ARE INDICATIVE ONLY. THE BUILDER CAN MAKE HIS/HER OWN MATERIAL CHOICE.
5. ALL CONNECTIONS/JOINTS WHICH HAVE STEAM PRESSURE APPLIED TO IT SHALL BE SILVER/HARD SOLDERED.
6. COMPRESSION SPRINGS ARE DRAWN IN COMPRESSED STATE (CP), UNCOMPRESSED STATE IS APPROX 40% TO 60% LONGER THEN COMPRESSED STATE.
7. WHERE PREFERRED SCREW OR RIVETED CONNECTIONS CAN BE OMITTED AND PARTS CAN BE BONDED TOGETHER BY USING EITHER HIGH STRENGTH GLUE, EPOXY RESIN, OR SOLDER.
8. PARTS WHICH ARE DIRECTLY EXPOSED TO STEAM AND/OR WATER SHOULD BE CONSTRUCTED USING NON-FERROUS OR NON CORROSIVE MATERIAL SUCH AS BRASS, BRONZE, GUNMETAL, STAINLESS STEEL, COPPER OR MONEL.
9. THE ORDER IN WHICH THE PARTS/COMPONENTS ARE MANUFACTURED AND THE MODEL IS ASSEMBLED IS ENTIRELY LEFT TO THE BUILDER/MODEL MAKER.
10. A COLOUR SCHEME FOR THIS PROJECT IS ENTIRELY LEFT UP TO THE MODEL MAKER.
11. THE MANNER IN WHICH THE PARTS/COMPONENTS ARE MANUFACTURED IS ENTIRELY LEFT UP TO THE BUILDER.
12. USE LOCTITE, ON SCREW OR PRESS FIT CONNECTIONS OR SURFACES, WERE DEEMED NECESSARY TO PREVENT PARTS FROM LOOSENING.
13. WASHER SHALL BE USED WHERE DEEMED NECESSARY.
14. ENQUIRE AT THE APPROPRIATE AUTHORITIES WHETHER OR NOT THIS BOILER REQUIRES A PRESSURE TEST CERTIFICATE
XX. ERRORS AND/OR OMISSIONS MAY OCCUR IN THE DRAWINGS, DO NOT HESITATE TO CONTACT ME SO THAT THE ERRORS/OMISSIONS CAN BE RECTIFIED.

NOTES: THIS ENGINE IS LOOSELY BASED ON THE ORIGINAL DESIGN BY Mr J.P. DUVAL.THE DRAWINGS WERE FOUND THE INTERNET ON THE WEBSITE OF JOHN TOM (www.john-tom.com)

TITLE
MODEL OF A GAS FIRED NARROW GAUGE STEAM RAILCAR FOR 2.5INCH/64mm GAUGE

DRAWING CONTENTS
ISOMETRIC VIEWS, NOTES AND BILL OF MATERIALS,

PROJECT No 07E-17-00

JDW DRAUGHTING SERVICES
J.A.M. DE WAAL. 12 BRIGHTWELL STREET PAPAKURA 2110. NEW ZEALAND. PHONE: 0064 09 2988815. MOB: 0211791000
E-MAIL: dewaal@xtra.co.nz.

PROJECTION JDWDS
DATE MARCH-2018
SHEET: 02 OF 09

MODEL SCALE: 1:9.4
DWG SCALE: 1:1 @A3 OR AS SHOWN
Copyright © J.A.M. DE WAAL PAPAKURA NZ
A3 No: NGRC-64-02

OTHER ABBREVIATIONS
DP = DEEP
DAA= DRILL AFTER ASSEMBLY
D&TAA= DRILL AND TAP AFTER ASSEMBLY
CF = CLOSE FIT (SIZE FOR SIZE)
PF = PRESS FIT
PFAA= PRESS FIT AFTER ASSEMBLY
PCD = PITCH CIRCLE DIAMETER
RM = REAM
HEX = HEXACON, 6SIDED
CP = COMPRESSED
KNL = KNURLED
CSK = COUNTERSINK
PL = PLACES
DWL= DOWEL
(T)HESOP=(TAPPED)HOLES EQUALLY SPACED ON PCD
(T)HESOC=(TAPPED)HOLES EQUALLY SPACED ON CIRCUMFERENCE
SA-xxx = SUB ASSEMBLY-xxx

MATERIAL ABBREVIATIONS:
ALU = ALUMINIUM
BRS = BRASS
BRZ = BRONZE OR GUNMETAL (BRZ/GM)
CI = CAST IRON
CU = COPPER
GRA = GRAPHITE
MS = MILD STEEL/BRIGHT MILD STEEL
S/S = SILVER STEEL OR STAINLESS STEEL
SPS = SPRING STEEL
PEEK= POLYETHER ETHER KETONE
SYN = SYNTHETIC MATERIAL SUCH AS VETON, NYLON, TEFLON OR RUBBER
IN GENERAL SYNTHETIC MATERIALS SOULD BE ABLE TO WITHSTAND THE HEAT AND PRESSURE(S) APPLIED TO THEM.
nnn/nnn MEANS THAT EITHER MATERIAL CAN BE USED

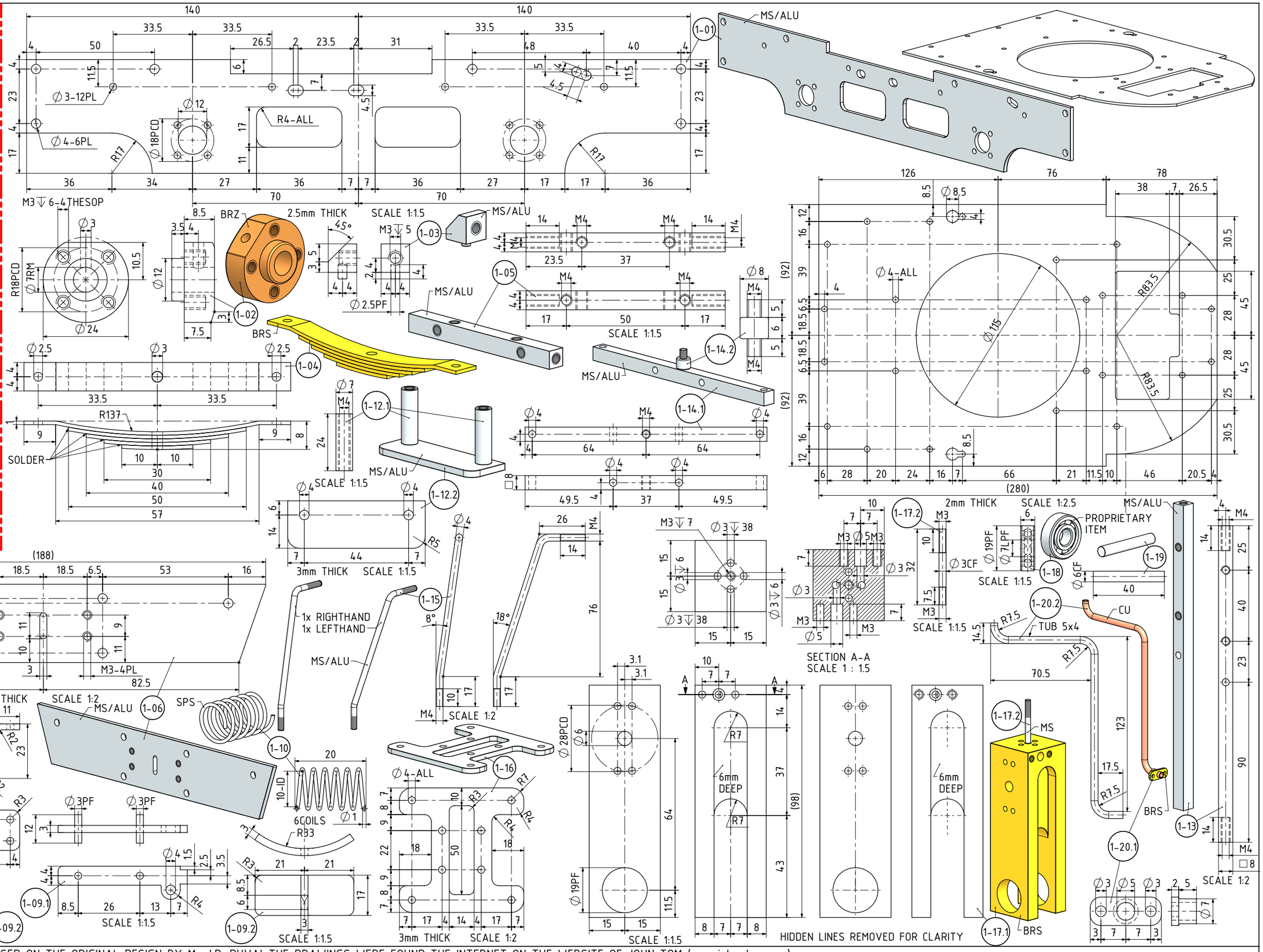

NOTES: THIS ENGINE IS LOOSELY BASED ON THE ORIGINAL DESIGN BY Mr J.P. DUVAL.THE DRAWINGS WERE FOUND THE INTERNET ON THE WEBSITE OF JOHN TOM (www.john-tom.com)

TITLE
MODEL OF A GAS FIRED NARROW GAUGE STEAM RAILCAR FOR 2.5INCH/64mm GAUGE

DRAWING CONTENTS
NOTES, PARTS AND ASSEMBLIES

PROJECT No 07E-17-00
JDW DRAUGHTING SERVICES
J.A.M. DE WAAL. 12 BRIGHTWELL STREET PAPAKURA 2110. NEW ZEALAND. PHONE: 0064 09 2988815. MOB: 0211791000
E-MAIL: dewaal@xtra.co.nz.

PROJECTION JDWDS
DATE MARCH-2018
SHEET: 03 OF 09

MODEL SCALE: 1:9.4
DWG SCALE: 1:1 @A3 OR AS SHOWN
Copyright © J.A.M. DE WAAL PAPAKURA NZ
A3 No: NGRC-64-03

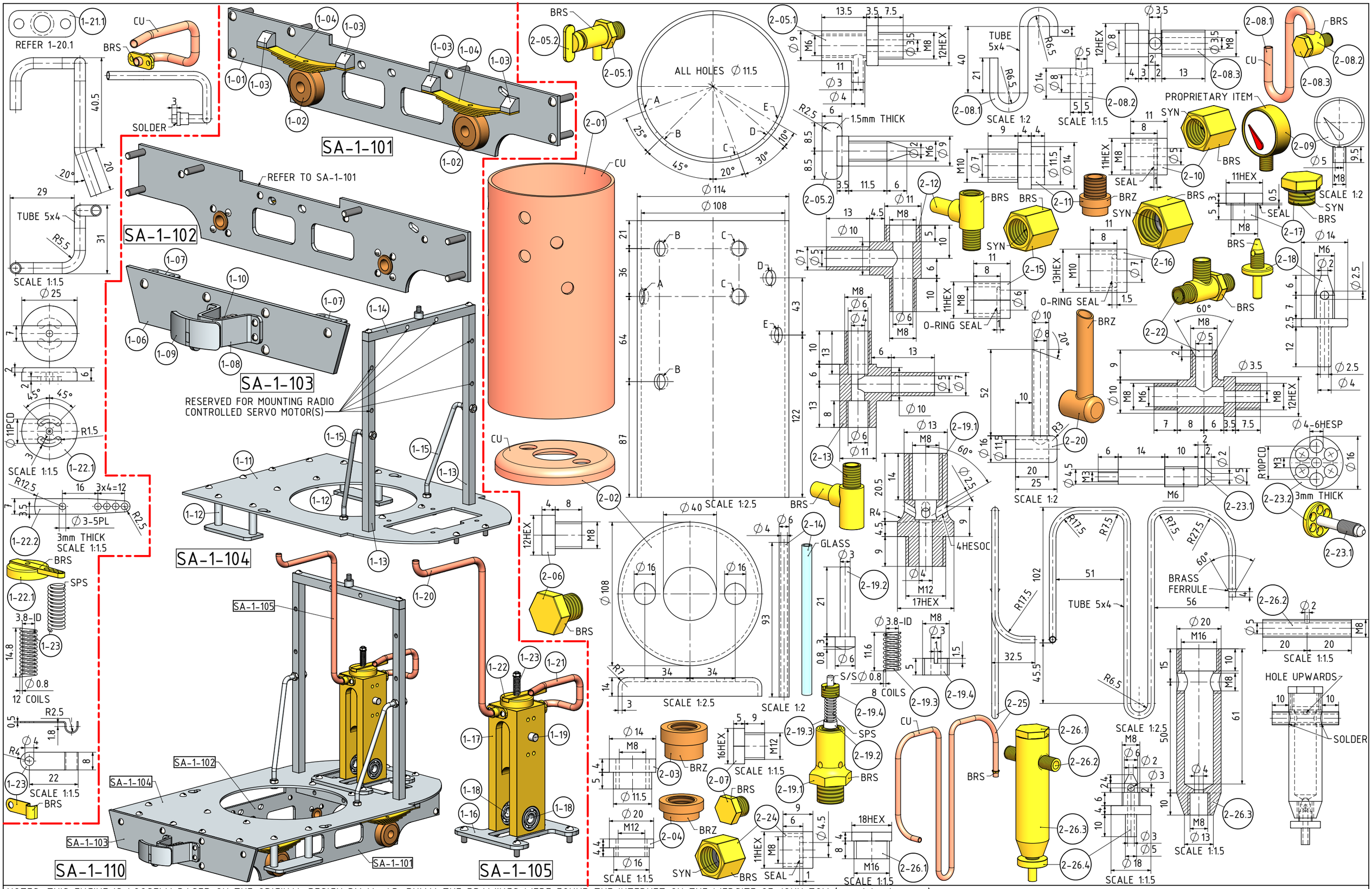

NOTES: THIS ENGINE IS LOOSELY BASED ON THE ORIGINAL DESIGN BY Mr J.P. DUVAL.THE DRAWINGS WERE FOUND THE INTERNET ON THE WEBSITE OF JOHN TOM (www.john-tom.com)

TITLE

MODEL OF A GAS FIRED NARROW GAUGE STEAM RAILCAR FOR 2.5INCH/64mm GAUGE

DRAWING CONTENTS

PARTS AND ASSEMBLIES

PROJECT No 07E-17-00

JDW DRAUGHTING SERVICES

J.A.M. DE WAAL. 12 BRIGHTWELL STREET PAPAKURA 2110. NEW ZEALAND. PHONE: 0064 09 2988815. MOB: 0211791000 E-MAIL: dewaal@xtra.co.nz.

PROJECTION JDWDS

DATE MARCH-2018

MODEL SCALE: 1:9.4

DWG SCALE: 1:1 @A3 OR AS SHOWN

Copyright © J.A.M. DE WAAL PAPAKURA NZ

SHEET: 04 OF 09 A3 No: NGRC-64-04

SA-2-201

SA-2-202

SA-2-204

SA-2-206

SA-2-209

SA-2-203

SA-2-205

SA-2-210

SA-3-301

SA-3-305

SCALE 1:2.5

SCALE 1:1.5

SCALE 1:2

SCALE 1:3

A STANDARD CAMPING GAS BURNER

STANDARD CAMPING GAS BURNER NOZZLE MAKE TO SUIT 3-04

ALL HOLES AND SLOTS TO LINE UP WITH 2-27.5

CHAMFER 1.5x45° 4mm THICK

SECTION A-A SCALE 1 : 1.5

SECTION B-B

SECTION C-C SCALE 1 : 2

TEETH PROFILE AS PER 4-02.1 SCALE 1:1.5

REFER TO SHEET-06

NOTES: THIS ENGINE IS LOOSELY BASED ON THE ORIGINAL DESIGN BY Mr J.P. DUVAL.THE DRAWINGS WERE FOUND THE INTERNET ON THE WEBSITE OF JOHN TOM (www.john-tom.com)

TITLE

MODEL OF A GAS FIRED NARROW GAUGE STEAM RAILCAR FOR 2.5INCH/64mm GAUGE

DRAWING CONTENTS

PARTS AND ASSEMBLIES

PROJECT No 07E-17-00

JDW DRAUGHTING SERVICES
J.A.M. DE WAAL. 12 BRIGHTWELL STREET PAPAKURA 2110. NEW ZEALAND. PHONE: 0064 09 2988815. MOB: 0211791000
E-MAIL: dewaal@xtra.co.nz.

PROJECTION JDWDS

DATE MARCH-2018

MODEL SCALE: 1:9.4

DWG SCALE: 1:1 @A3 OR AS SHOWN

Copyright © J.A.M. DE WAAL PAPAKURA NZ

SHEET: 05 OF 09 | A3 | No: NGRC-64-05

SA-4-401

SA-4-402

SA-4-403

SA-4-404

SA-4-405

SA-3-305

2mm THICK SCALE 1:3

1mm THICK SCALE 1:3

SCALE 1:1.5

HIDDEN LINES REMOVED FOR CLARITY

SECTION A-A

SCALE 1:2

11mm THICK SCALE 1:2

TAKE OVER FROM 5-01.1

SCALE 1:4

LEFTHAND SIDE

RIGHTHAND SIDE

REFER TO 5-01.1 FOR ALL OTHER DIMENSION DETAILS

NOTES: THIS ENGINE IS LOOSELY BASED ON THE ORIGINAL DESIGN BY Mr J.P. DUVAL.THE DRAWINGS WERE FOUND THE INTERNET ON THE WEBSITE OF JOHN TOM (www.john-tom.com)

TITLE

MODEL OF A GAS FIRED NARROW GAUGE STEAM RAILCAR FOR 2.5INCH/64mm GAUGE

DRAWING CONTENTS

PARTS AND ASSEMBLIES

PROJECT No 07E-17-00

JDW DRAUGHTING SERVICES
J.A.M. DE WAAL. 12 BRIGHTWELL STREET PAPAKURA 2110. NEW ZEALAND. PHONE: 0064 09 2988815. MOB: 0211791000
E-MAIL: dewaal@xtra.co.nz.

PROJECTION JDWDS

DATE MARCH-2018

MODEL SCALE: 1:9.4

DWG SCALE: 1:1 @A3 OR AS SHOWN

Copyright © J.A.M. DE WAAL PAPAKURA NZ

SHEET: 06 OF 09 | A3 | No: NGRC-64-06

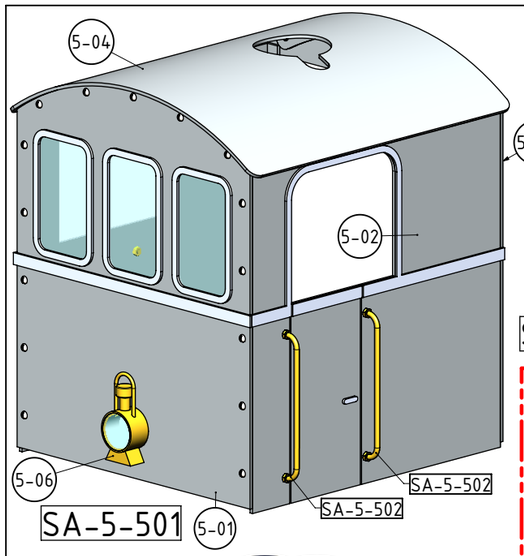

SA-5-501

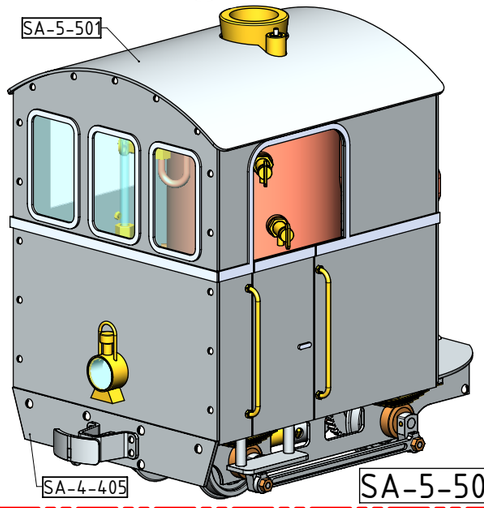

SA-5-505

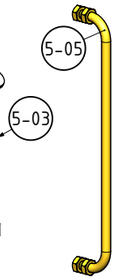

SA-5-502

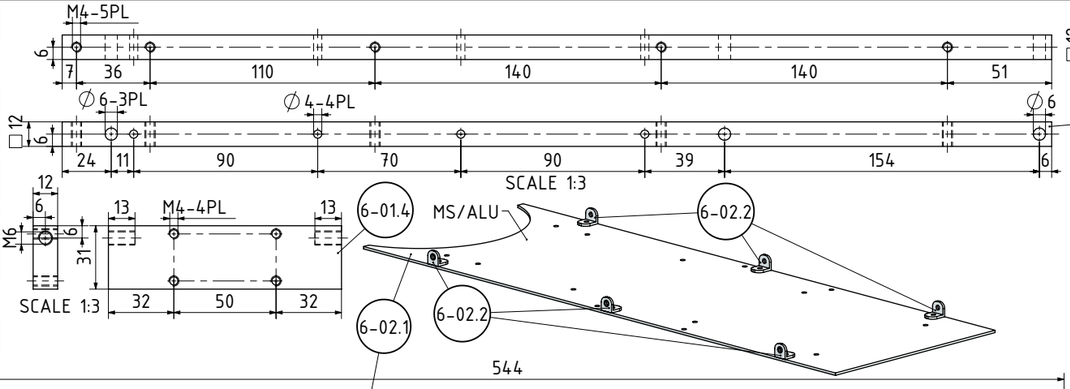

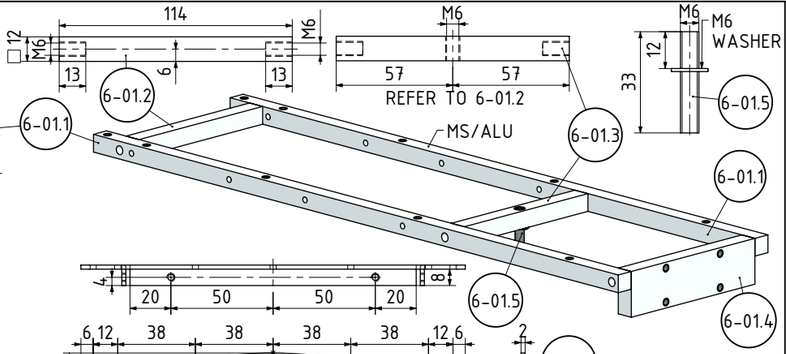

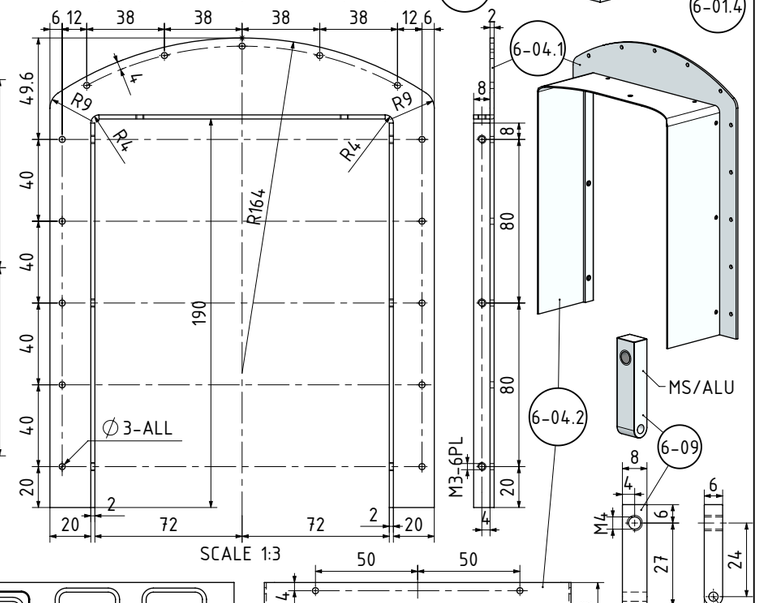

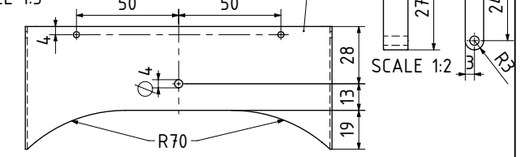

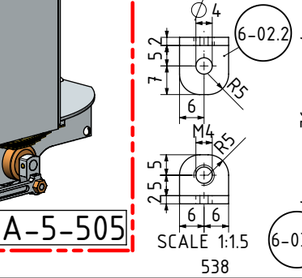

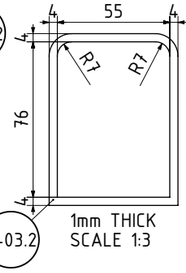

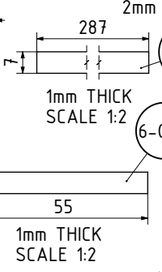

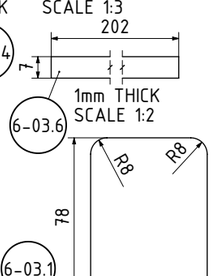

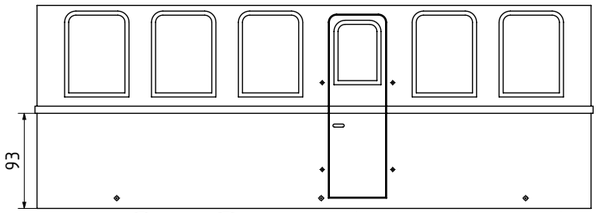

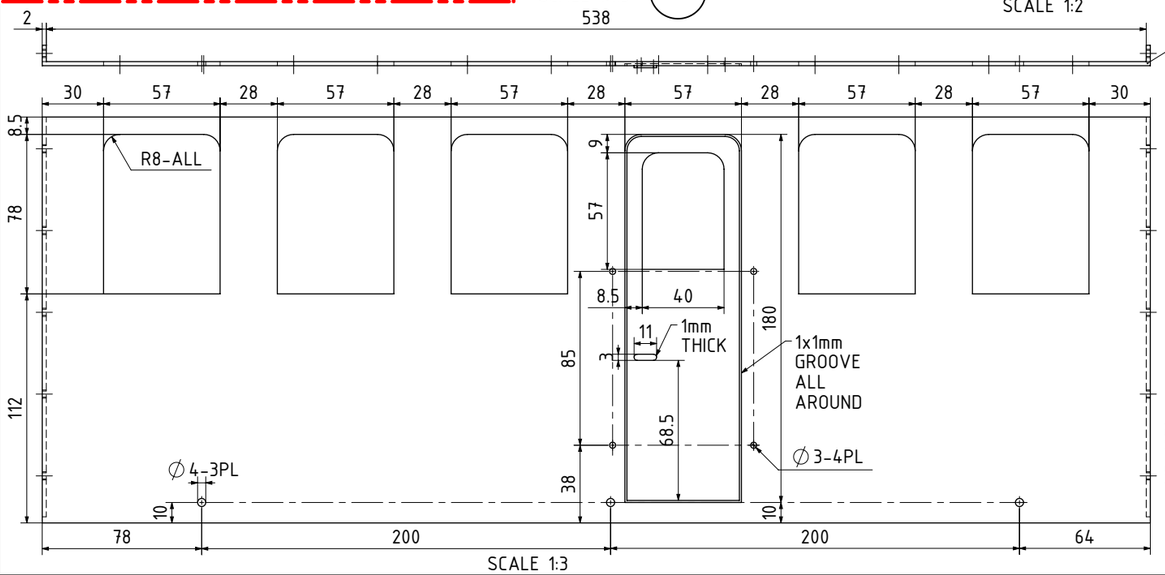

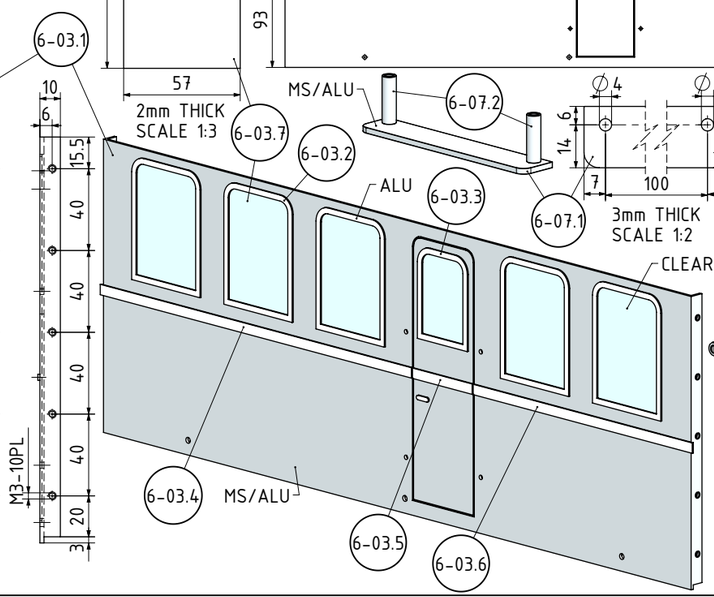

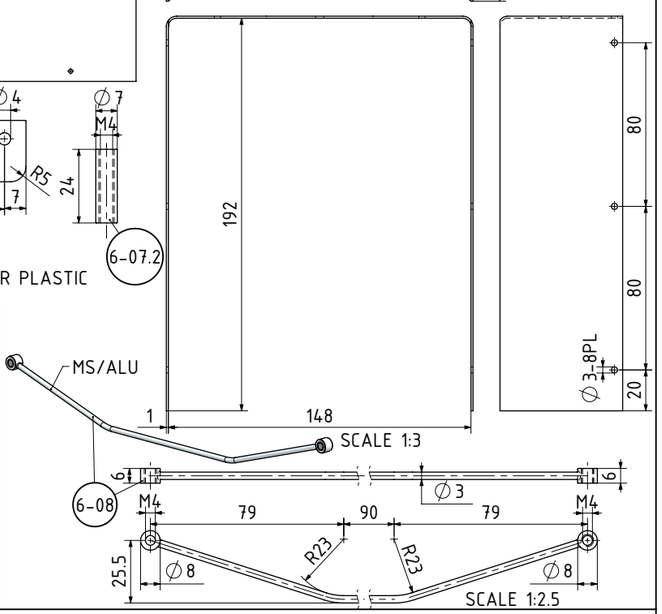

NOTES: THIS ENGINE IS LOOSELY BASED ON THE ORIGINAL DESIGN BY Mr J.P. DUVAL.THE DRAWINGS WERE FOUND THE INTERNET ON THE WEBSITE OF JOHN TOM (www.john-tom.com)

TITLE

MODEL OF A GAS FIRED NARROW GAUGE STEAM RAILCAR FOR 2.5INCH/64mm GAUGE

DRAWING CONTENTS

PARTS AND ASSEMBLIES

PROJECT No 07E-17-00

JDW DRAUGHTING SERVICES
J.A.M. DE WAAL. 12 BRIGHTWELL STREET PAPAKURA 2110. NEW ZEALAND. PHONE: 0064 09 2988815. MOB: 0211791000
E-MAIL: dewaal@xtra.co.nz.

PROJECTION JDWDS

DATE MARCH-2018

SHEET: 07 OF 09

MODEL SCALE: 1:9.4

DWG SCALE: 1:1 @A3 OR AS SHOWN

Copyright © J.A.M. DE WAAL PAPAKURA NZ

A3 No: NGRC-64-07

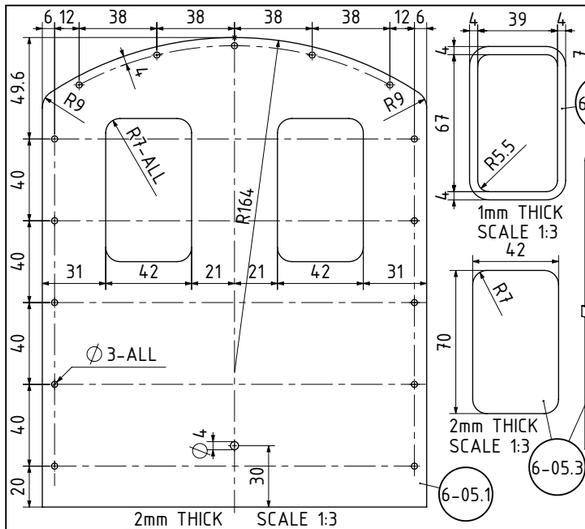

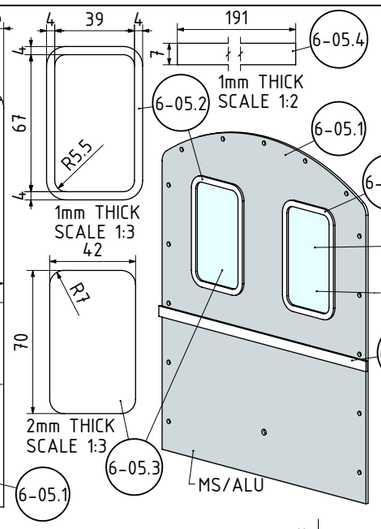

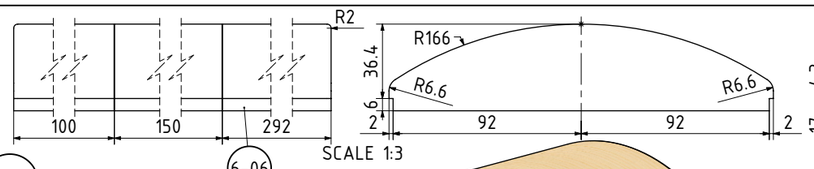

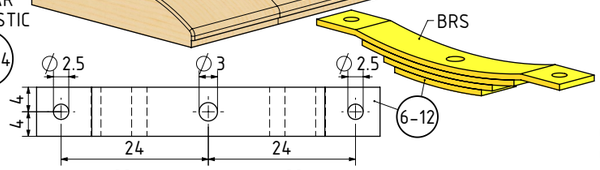

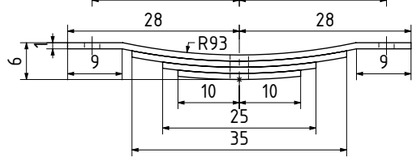

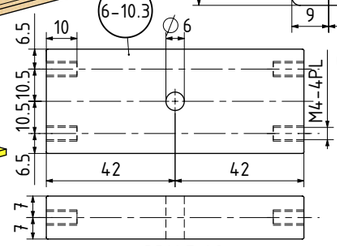

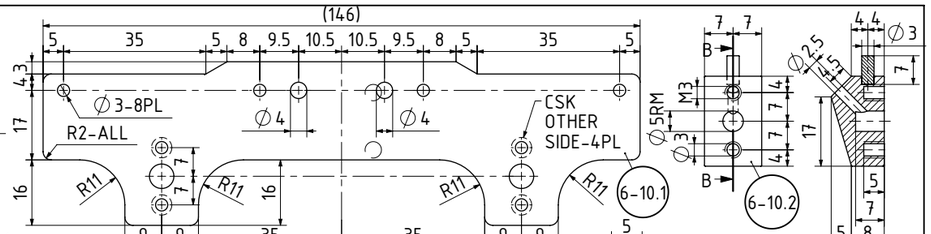

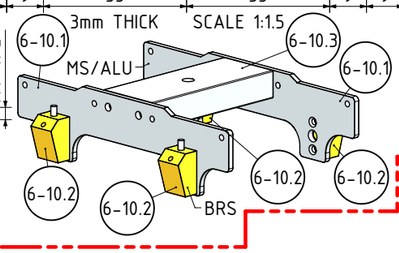

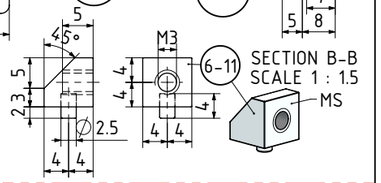

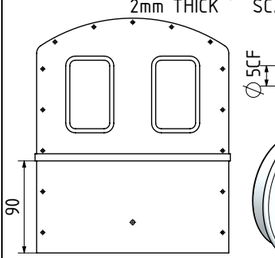

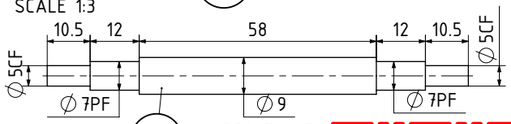

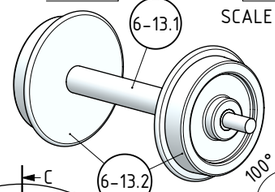

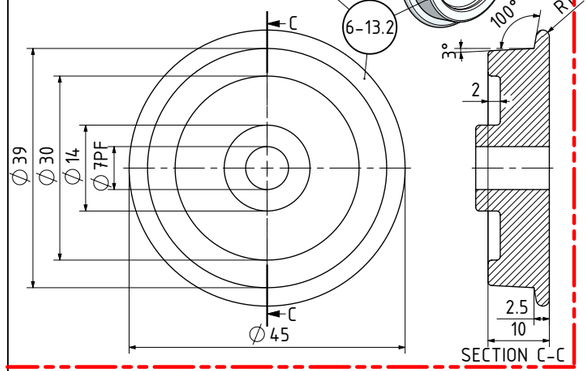

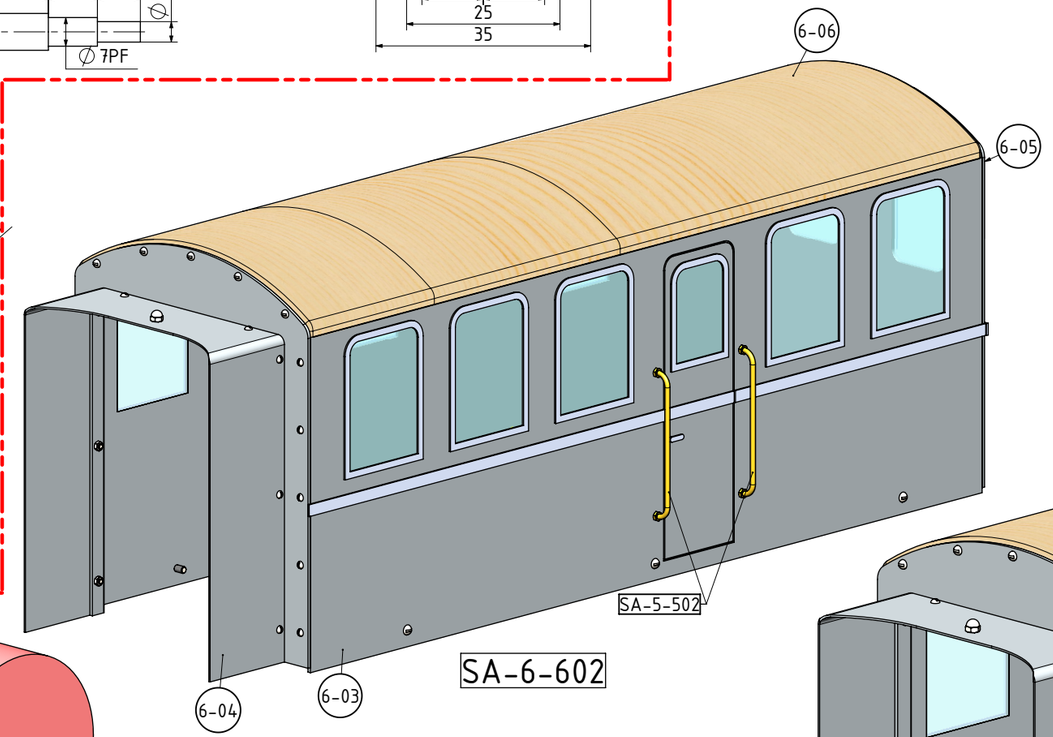

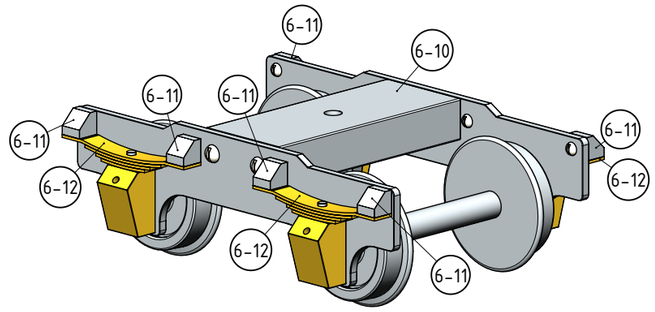

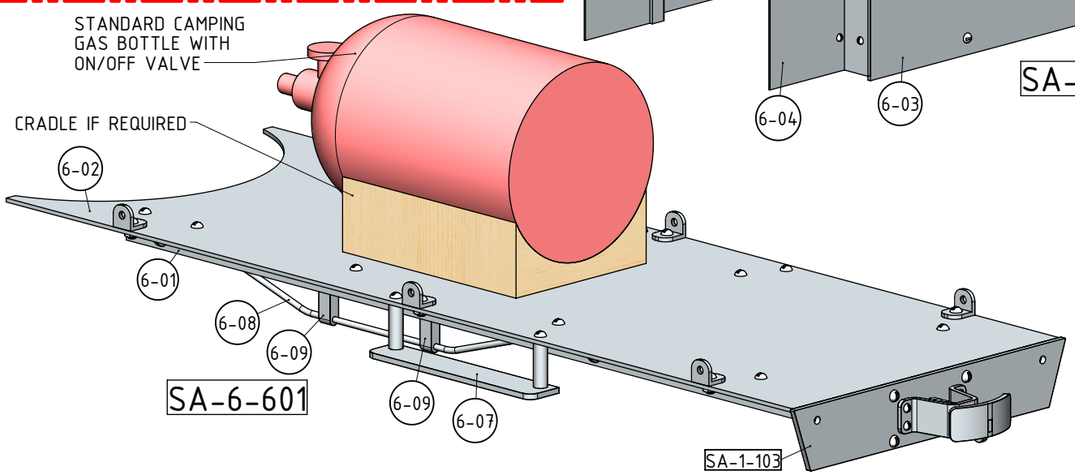

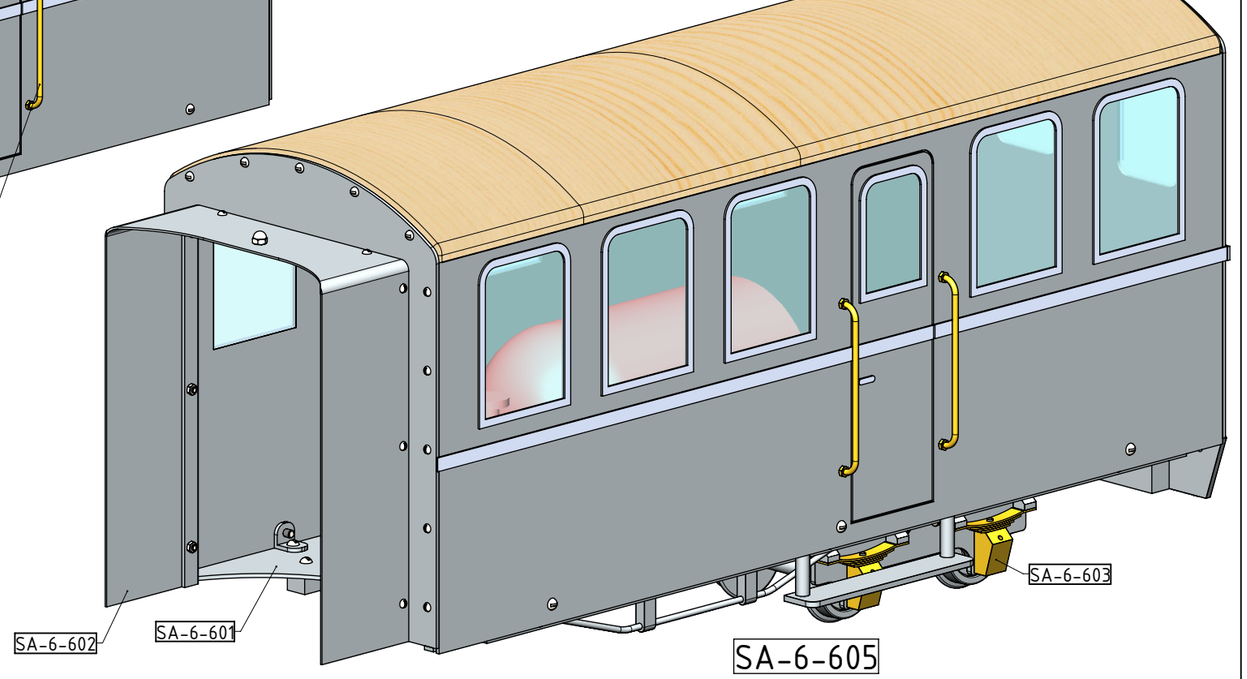

NOTES: THIS ENGINE IS LOOSELY BASED ON THE ORIGINAL DESIGN BY Mr J.P. DUVAL.THE DRAWINGS WERE FOUND THE INTERNET ON THE WEBSITE OF JOHN TOM (www.john-tom.com)

TITLE

MODEL OF A GAS FIRED NARROW GAUGE STEAM RAILCAR FOR 2.5INCH/64mm GAUGE

DRAWING CONTENTS

PARTS AND ASSEMBLIES

PROJECT No 07E-17-00

JDW DRAUGHTING SERVICES
J.A.M. DE WAAL. 12 BRIGHTWELL STREET PAPAKURA 2110. NEW ZEALAND. PHONE: 0064 09 2988815. MOB: 0211791000
E-MAIL: dewaal@xtra.co.nz.

PROJECTION JDWDS

DATE MARCH-2018

SHEET: 08 OF 09

MODEL SCALE: 1:9.4

DWG SCALE: 1:1 @A3 OR AS SHOWN

Copyright © J.A.M. DE WAAL PAPAKURA NZ

A3

No: NGRC-64-08

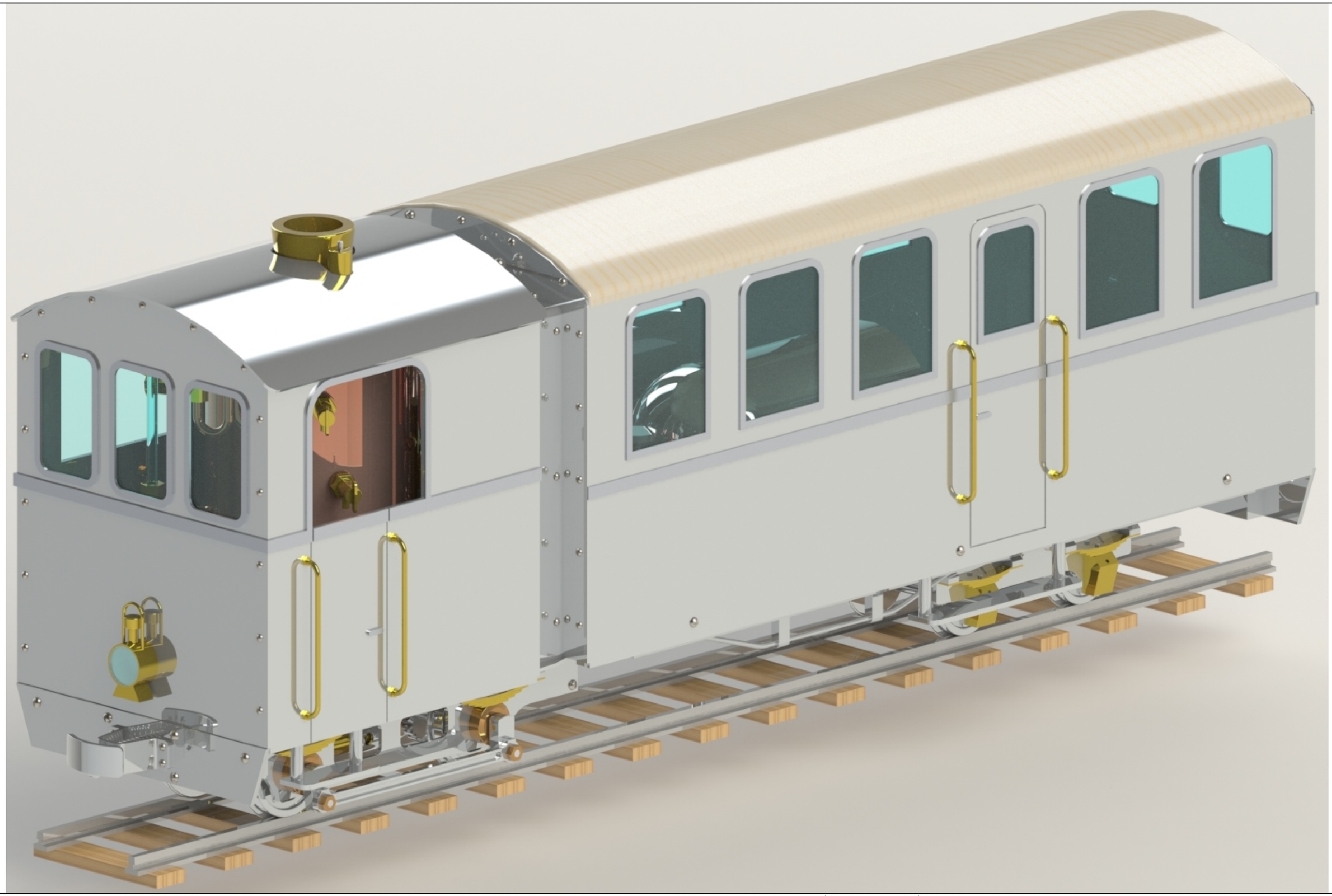

NOTES: THIS ENGINE IS LOOSELY BASED ON THE ORIGINAL DESIGN BY Mr J.P. DUVAL.THE DRAWINGS WERE FOUND THE INTERNET ON THE WEBSITE OF JOHN TOM (www.john-tom.com)

TITLE
MODEL OF A GAS FIRED NARROW GAUGE STEAM RAILCAR FOR 2.5INCH/64mm GAUGE

DRAWING CONTENTS
RENDERED PICTURE

PROJECT No 07E-17-00

JDW DRAUGHTING SERVICES
J.A.M. DE WAAL. 12 BRIGHTWELL STREET PAPAKURA 2110. NEW ZEALAND. PHONE: 0064 09 2988815. MOB: 0211791000
E-MAIL: dewaal@xtra.co.nz.

PROJECTION JDWDS

DATE MARCH-2018

SHEET: 09 OF 09

MODEL SCALE: 1:9.4

DWG SCALE: 1:1 @A3 OR AS SHOWN

Copyright © J.A.M. DE WAAL PAPAKURA NZ

A3 No: NGRC-64-09