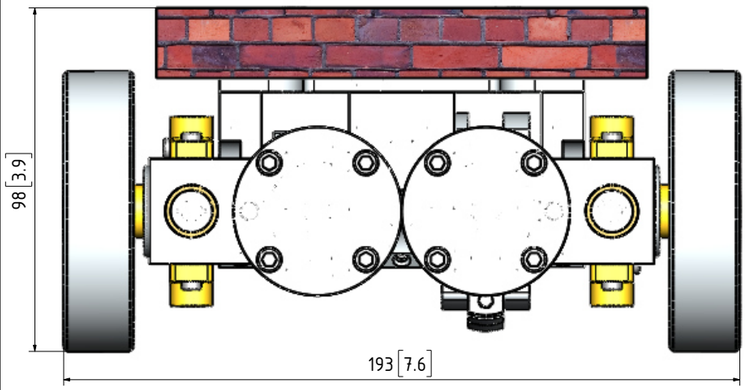

NOTES:
0. ALL DRAWINGS ARE IN METRIC MEASUREMENTS
1. ALL ENGINEERING PRACTICES SHALL BE APPLIED WITH REGARDS TO HOLE AND SHAFT TOLERANCES.
2. WHERE SCREWS OR BOLTS ARE USED THE CLEARANCE HOLES SHALL BE APPROXIMATELY 5% TO 8% LARGER THAN THE MATCHING TAPPED HOLE.
3. PREFERABLY ALL TAPPED HOLES AND MATCHING SCREWS AND/OR BOLTS TO BE METRIC FINE (MF)
4. MATERIALS SPECIFIED ON THE DRAWINGS ARE INDICATIVE ONLY. THE BUILDER CAN MAKE HIS/HER OWN MATERIAL CHOICE.
5. ALL CONNECTIONS/JOINTS WHICH HAVE STEAM PRESSURE APPLIED TO IT SHALL BE SILVER/HARD SOLDERED.
6. COMPRESSION SPRINGS ARE DRAWN IN COMPRESSED STATE (CP), UNCOMPRESSED STATE IS APPROX 40% TO 60% LONGER THEN COMPRESSED STATE.
7. WHERE PREFERRED SCREW OR RIVETED CONNECTIONS CAN BE OMITTED AND PARTS CAN BE BONDED TOGETHER BY USING EITHER HIGH STRENGTH GLUE, EPOXY RESIN, OR SOLDER.
8. PARTS WHICH ARE DIRECTLY EXPOSED TO STEAM AND/OR WATER SHOULD BE CONSTRUCTED USING NON-FERROUS OR NON CORROSIVE MATERIAL SUCH AS BRASS, BRONZE, GUNMETAL, STAINLESS STEEL, COPPER OR MONEL.
9. THE ORDER IN WHICH THE PARTS/COMPONENTS ARE MANUFACTURED AND THE MODEL IS ASSEMBLED IS ENTIRELY LEFT TO THE BUILDER/MODEL MAKER.
10. A COLOUR SCHEME FOR THIS PROJECT IS ENTIRELY LEFT UP TO THE MODEL MAKER.
11. THE MANNER IN WHICH THE PARTS/COMPONENTS ARE MANUFACTURED IS ENTIRELY LEFT UP TO THE BUILDER.
12. USE LOCTITE, ON SCREW OR PRESS FIT CONNECTIONS OR SURFACES, WERE DEEMED NECESSARY TO PREVENT PARTS FROM LOOSENING.
13. WASHERS AND/OR SPRINGWASHERS SHALL BE USED WHERE DEEMED NECESSARY.
XX. ERRORS AND/OR OMISSIONS MAY OCCUR IN THE DRAWINGS, DO NOT HESITATE TO CONTACT ME SO THAT THE ERRORS/OMISSIONS CAN BE RECTIFIED.

MATERIAL ABBREVIATIONS:
ALU = ALUMINIUM
HALU= HARD ALUMINIUM
BRS = BRASS
BRZ = BRONZE OR GUNMETAL (BRZ/GM)
CI = CAST IRON
CU = COPPER
GRA = GRAPHITE
MS = MILD STEEL/BRIGHT MILD STEEL
SS = SILVER STEEL OR STAINLESS STEEL
SPS = SPRING STEEL
PEEK= POLYETHER ETHER KETONE
SYN = SYNTHETIC MATERIAL SUCH AS VETON, NYLON, TEFLON OR RUBBER
IN GENERAL SYNTHETIC MATERIALS SOULD BE ABLE TO WITHSTAND THE HEAT AND PRESSURE(S) APPLIED TO THEM.
nnn/nnn MEANS THAT EITHER MATERIAL CAN BE USED

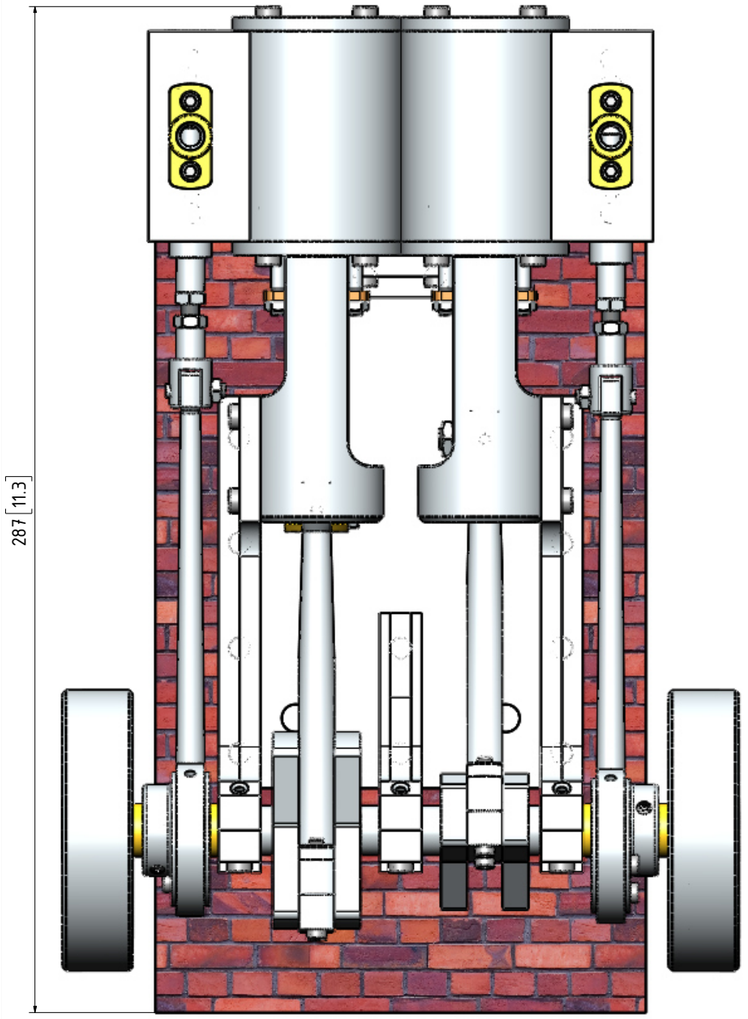

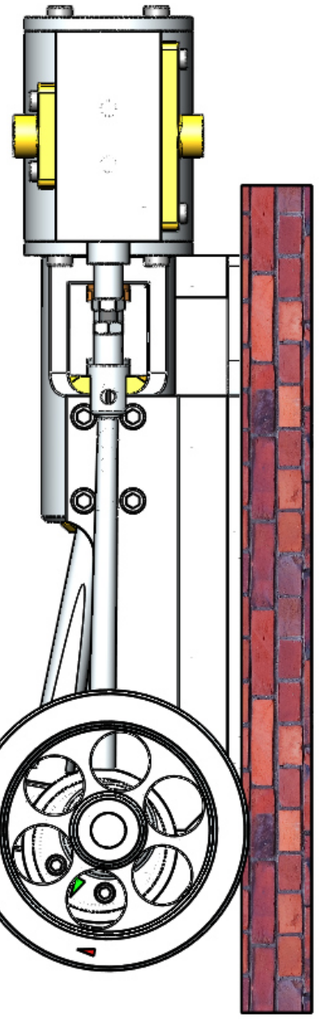

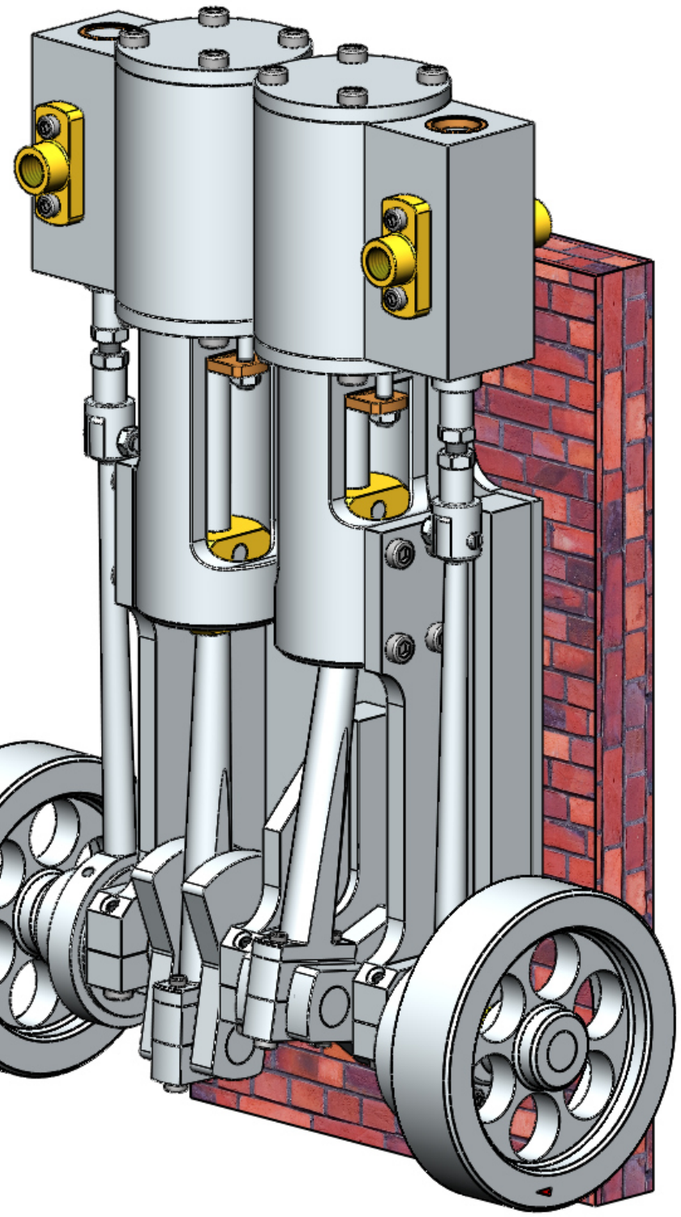

OTHER ABBREVIATIONS
AS = AS SHOWN
DP = DEEP
DAA= DRILL AFTER ASSEMBLY
D&TAA= DRILL AND TAP AFTER ASSEMBLY
CF = CLOSE FIT (SIZE FOR SIZE)
PF = PRESS FIT
PFAA= PRESS FIT AFTER ASSEMBLY
PCD = PITCH CIRCLE DIAMETER
RM = REAM
HEX = HEXACON, 6SIDED
CP = COMPRESSED
KNL = KNURLED
CSK = COUNTERSINK
PL = PLACES
DWL= DOWEL
SPF= SPOTFACE
(T)HESOP=(TAPPED)HOLES EQUALLY SPACED ON PCD
(T)HESOC=(TAPPED)HOLES EQUALLY SPACED ON CIRCUMFERENCE
OD = OUTSIDE DIAMETER
ID = INSIDE DIAMETER
SA-xxx = SUB ASSEMBLY-xxx

THE OFF SET ANGLE OF THE ECCENTRIC IN RELATION TO THE CRANK AXIS TO BE EXPERIMENTALLY DETERMINED FOR THE SMOOTH RUNNING OF THE ENGINE AND SATISFACTION OF THE BUILDER

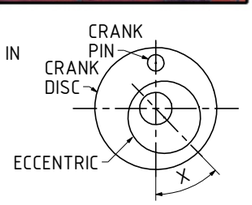

QTY.	PART NUMBER
1	09C-49-00-1-01-BASE CRADLE
2	09C-49-00-1-02-CYLINDER
2	09C-49-00-1-03-CYLINDER TOP COVER
2	09C-49-00-1-04-CYLINDER BOTTOM COVER
1	09C-49-00-2-01-CRANK SHAFT
2	09C-49-00-2-02-PISTON+CROSSHEAD
2	09C-49-00-2-03-CON-ROD
2	09C-49-00-2-04-ECCENTRIC
2	09C-49-00-2-05-SPOOLVALVE
2	09C-49-00-2-06-ECCENTRIC STRAP
2	09C-49-00-M3x5 A-K GRUB SCREW
6	09C-49-00-M4 NUT
12	09C-49-00-M4x10 A-K CYL HEAD SCREW
4	09C-49-00-M4x26 A-K CYL HEAD SCREW
4	09C-49-00-M4x8 A-K GRUB SCREW
4	09C-49-00-M5 NUT
8	09C-49-00-M5x10 A-K CYL HEAD SCREW
14	09C-49-00-M5x14 A-K CYL HEAD SCREW
6	09C-49-00-M5x16 A-K CYL HEAD SCREW
2	09C-49-00-M5x20 A-K CYL HEAD SCREW
2	09C-49-00-M6 NUT-THIN
12	09C-49-00-M6x14 A-K C-SINK SCREW

NOTES: THE ORIGINAL DRAWINGS WERE GIVEN TO ME. THE ORIGINAL ENGINE WAS DESIGEND/BUILT BY J.P.DUVAL (LUSSAN) DRAWING NUMBER(S) MVh TC 14/18 SHT 00-04 DATED 08/2006 THE ENGINE ON THESE DRAWINGS IS TWO TIMES THE ORIGINAL SIZE

TITLE
A 2 CYLINDER VERTICAL WALL MOUNTED STEAM ENGINE (B=28mm S=38mm)

DRAWING CONTENTS
GENERAL ARRANGEMENT

JDW DRAUGHTING SERVICES
J.A.M. DE WAAL. 12 BRIGHTWELL STREET PAPAKURA 2110. NEW ZEALAND. PHONE: 0064 09 2988815. MOB: 0211791000 E-MAIL: dewaal@xtra.co.nz.

PROJECT No 09C-49-00
PROJECTION
JDWDS
DATE JULY 2020
SHEET: 01 OF 03
MODEL SCALE: 1:1
DWG SCALE: 1:1 @A3 OR AS SHOWN
Copyright © J.A.M. DE WAAL PAPAKURA NZ
A3 No: 09C-49-00-SHT01

DRAWINGS ARE FOR PERSONAL USE ONLY NOT FOR COMMERCIAL PURPOSES

1-01.1
4mm THICK SCALE 1:2
1-01.2
1-01.3
MIRROR IMAGE OF 1-01.2 SCALE 1:2
1-01.4
SCALE 1:1.5
FOR ALL OTHER DIMENSION DETAILS REFER TO 1-01.2
1-01.5
1-01.6
SPLIT LINE 3 REQD
1-01.7
3 REQD
1-02.2
SCALE 1:1.5
1-02.4
SCALE 1:1.5
ALL HOLES TO BE DRILLED AFTER ASSEMBLY
SOLDER/BRAZE TO 1-02.1
1-02.3
SCALE 1:1.5
SECTION B-B
SCALE 1 : 1.5
6mm DEEP
SCALE 1:1.5
SA-1-102
SA-1-101
SA-1-105
ALU/MS
BRZ
SYN
MS
HALU/MS
2 REQD
SCALE 1:1.5
SCALE 1:2
SECTION C-C
SCALE 1 : 1.5
SEAL
SECTION D-D
SCALE 1 : 2
SCALE 1:1.5
7.5mm THICK
SCALE 1:1.5
SECTION A-A
SCALE 1 : 1.5
OPPOSITE FACE EQUAL
BRS
ALU/MS

NOTES: THE ORIGINAL DRAWINGS WERE GIVEN TO ME. THE ORIGINAL ENGINE WAS DESIGEND/BUILT BY J.P.DUVAL (LUSSAN) DRAWING NUMBER(S) MVh TC 14/18 SHT 00-04 DATED 08/2006 THE ENGINE ON THESE DRAWINGS IS TWO TIMES THE ORIGINAL SIZE

TITLE
A 2 CYLINDER VERTICAL WALL MOUNTED STEAM ENGINE (B=28mm S=38mm)

DRAWING CONTENTS
PARTS AND ASSEMBLIES

JDW DRAUGHTING SERVICES
J.A.M. DE WAAL. 12 BRIGHTWELL STREET PAPAKURA 2110. NEW ZEALAND. PHONE: 0064 09 2988815. MOB: 0211791000 E-MAIL: dewaal@xtra.co.nz.

PROJECT No 09C-49-00

PROJECTION

JDWDS

DATE JULY 2020

MODEL SCALE: 1:1

DWG SCALE: 1:1 @A3 OR AS SHOWN

Copyright © J.A.M. DE WAAL PAPAKURA NZ

SHEET: 02 OF 03 A3 No: 09C-49-00-SHT02

DRAWINGS ARE FOR PERSONAL USE ONLY NOT FOR COMMERCIAL PURPOSES

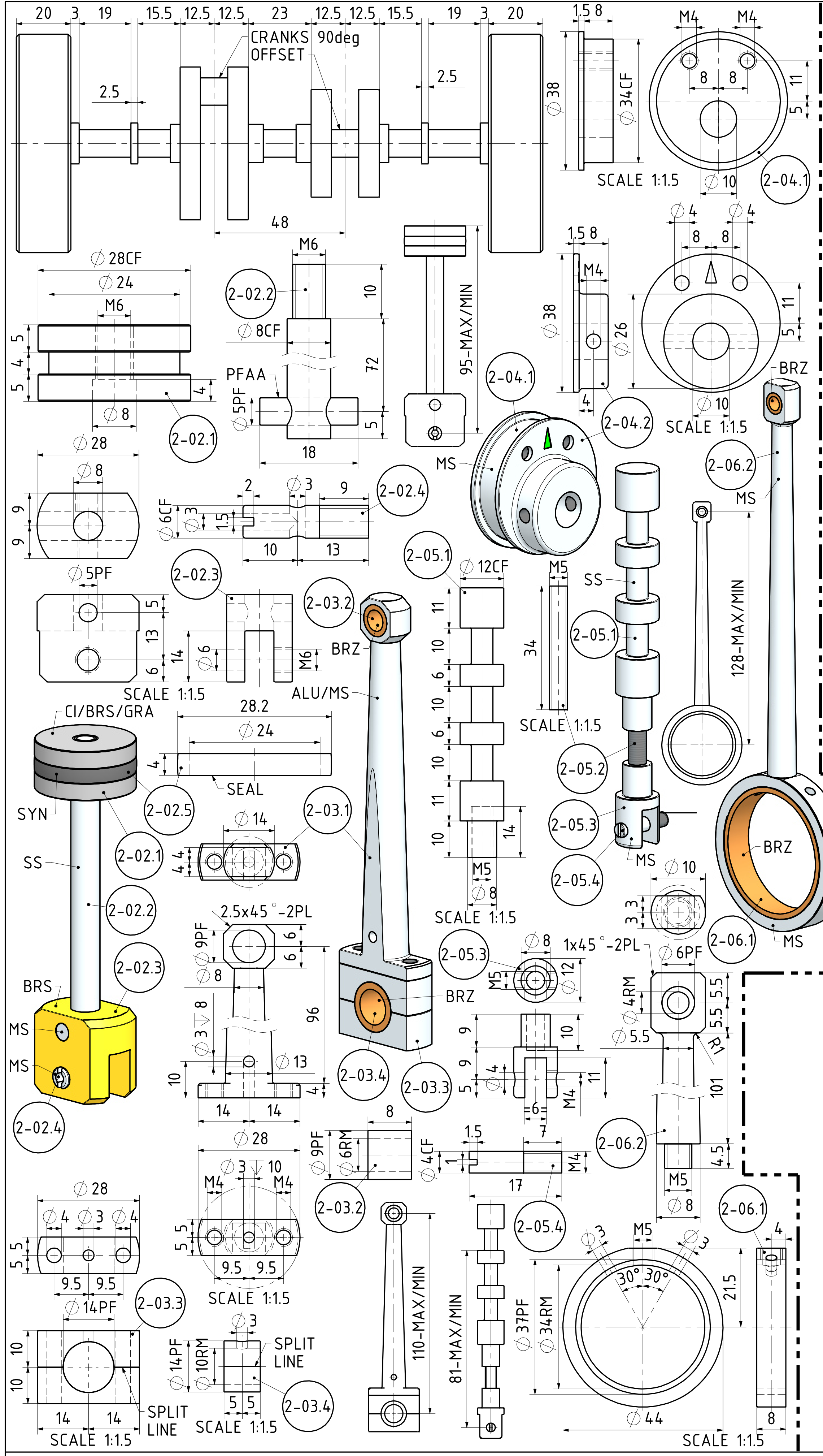

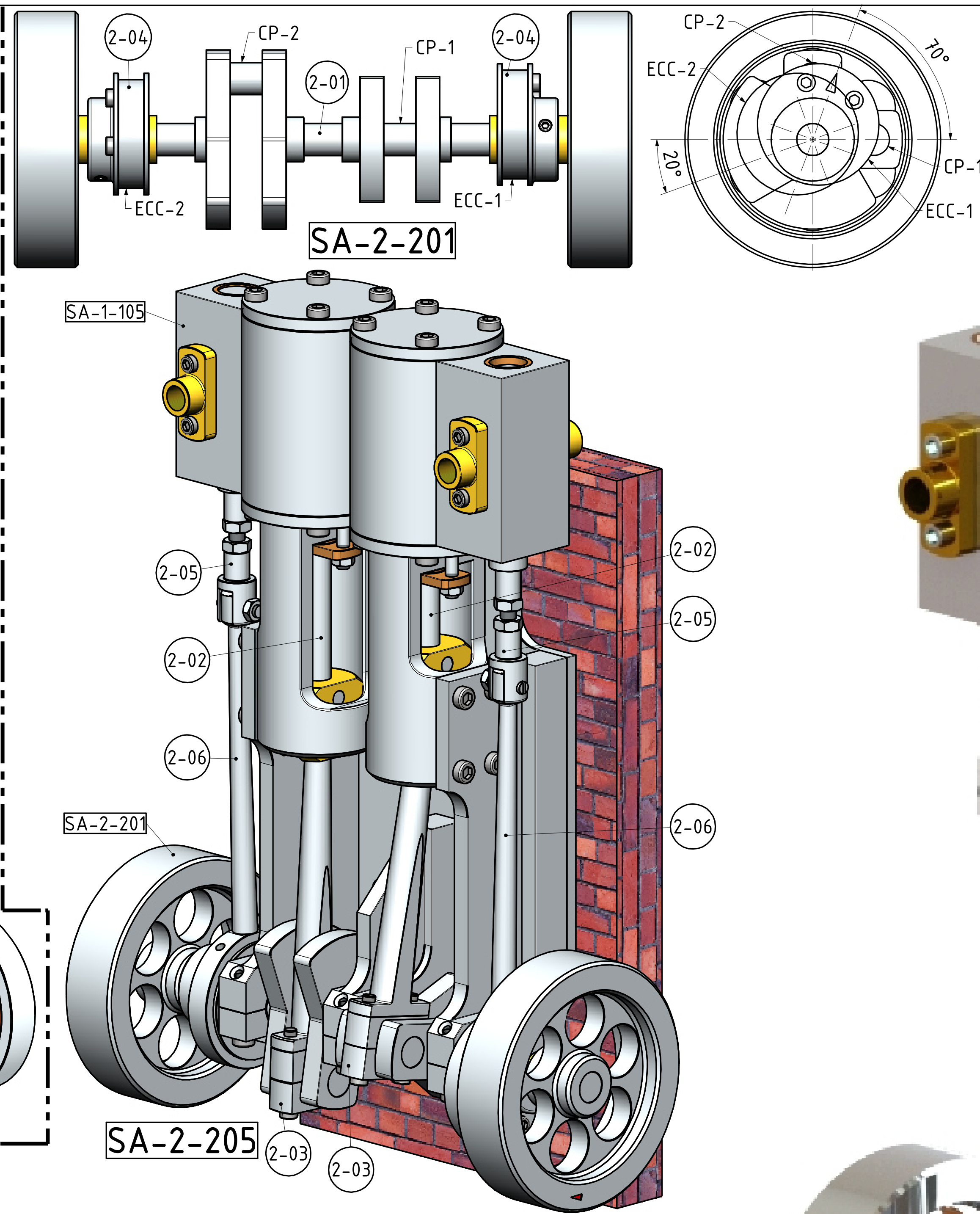

THE OFF SET ANGLE OF THE ECCENTRIC IN RELATION TO THE CRANK AXIS TO BE EXPERIMENTALLY DETERMINED FOR THE SMOOTH RUNNING OF THE ENGINE AND SATISFACTION OF THE BUILDER

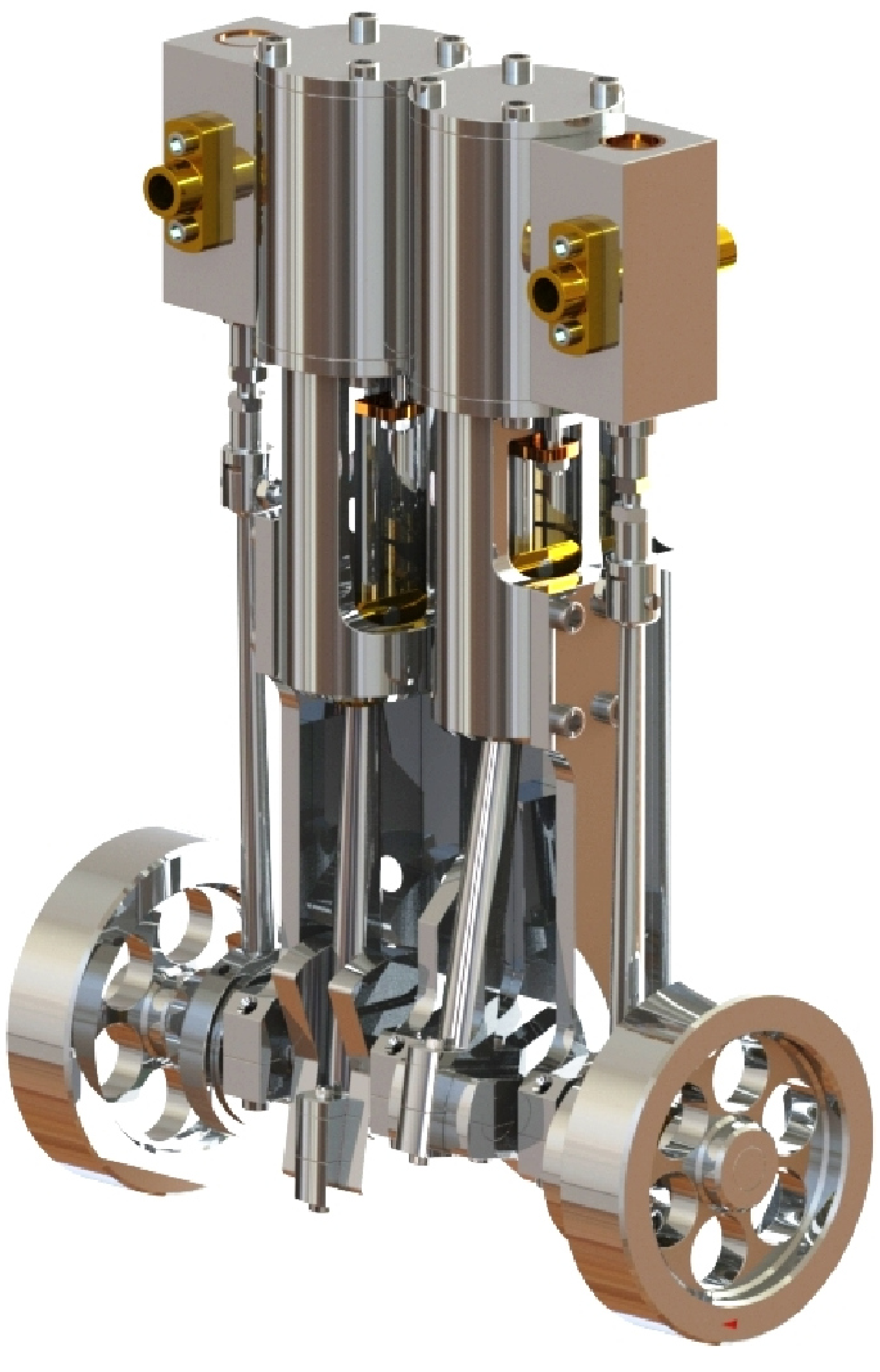

NOTES: THE ORIGINAL DRAWINGS WERE GIVEN TO ME. THE ORIGINAL ENGINE WAS DESIGEND/BUILT BY J.P.DUVAL (LUSSAN) DRAWING NUMBER(S) MVh TC 14/18 SHT 00-04 DATED 08/2006 THE ENGINE ON THESE DRAWINGS IS TWO TIMES THE ORIGINAL SIZE

TITLE
A 2 CYLINDER VERTICAL WALL MOUNTED STEAM ENGINE (B=28mm S=38mm)

DRAWING CONTENTS
PARTS AND ASSEMBLIES, RENDERED PICTURE

PROJECT No 09C-49-00

JDW DRAUGHTING SERVICES
J.A.M. DE WAAL. 12 BRIGHTWELL STREET PAPAKURA 2110. NEW ZEALAND. PHONE: 0064 09 2988815. MOB: 0211791000 E-MAIL: dewaal@xtra.co.nz.

PROJECTION | JDWDS

DATE JULY 2020

SHEET: 03 OF 03 | A3 | No: 09C-49-00-SHT03

MODEL SCALE: 1:1
DWG SCALE: 1:1 @A3 OR AS SHOWN

Copyright © J.A.M. DE WAAL PAPAKURA NZ

DRAWINGS ARE FOR PERSONAL USE ONLY NOT FOR COMMERCIAL PURPOSES