| QTY. | PART NUMBER |
|---|---|
| 1 | 09A-57-00-1-01-BASE + STAND |
| 1 | 09A-57-00-2-01-CRANKSHAFT+FLYWHEEL |
| 1 | 09A-57-00-2-02-CYLINDER |
| 1 | 09A-57-00-2-03-PISTON |

DUE TO THE LACK OF INFORMATION ON THE ORIGINAL DRAWING(S), SUCH AS VIEWS, DIMENSIONS, SECTIONS ETC AND/OR CLARITY OF COMPONENTS, OMITTED PARTS/COMPONENTS, SOME OF THE COMPONENTS MIGHT NOT BE AS CONSTRUCTED ORIGINALLY OR AS THE ORIGINAL DESIGNER INTENDED

MATERIAL ABBREVIATIONS:
ALU = ALUMINIUM
HALU= HARD ALUMINIUM
BRS = BRASS
BRZ = BRONZE OR GUNMETAL (BRZ/GM)
CI = CAST IRON
CU = COPPER
GRA = GRAPHITE
MS = MILD STEEL/BRIGHT MILD STEEL
SS = SILVER STEEL OR STAINLESS STEEL
SPS = SPRING STEEL
PEEK= POLYETHER ETHER KETONE
SYN = SYNTHETIC MATERIAL SUCH AS VETON, NYLON, TEFLON OR RUBBER
IN GENERAL SYNTHETIC MATERIALS SOULD BE ABLE TO WITHSTAND THE HEAT AND PRESSURE(S) APPLIED TO THEM.
nnn/nnn MEANS THAT EITHER MATERIAL CAN BE USED

GENERAL NOTES:
0. ALL DRAWINGS ARE IN METRIC MEASUREMENTS
1. ALL ENGINEERING PRACTICES SHALL BE APPLIED WITH REGARDS TO HOLE AND SHAFT TOLERANCES.
2. WHERE SCREWS OR BOLTS ARE USED THE CLEARANCE HOLES SHALL BE APPROXIMATELY 5% TO 8% LARGER THAN THE MATCHING TAPPED HOLE.
3. PREFERABLY ALL TAPPED HOLES AND MATCHING SCREWS AND/OR BOLTS TO BE METRIC FINE (MF)
4. MATERIALS SPECIFIED ON THE DRAWINGS ARE INDICATIVE ONLY. THE BUILDER CAN MAKE HIS/HER OWN MATERIAL CHOICE.
5. ALL CONNECTIONS/JOINTS WHICH HAVE STEAM PRESSURE APPLIED TO IT SHALL BE SILVER/HARD SOLDERED.
6. COMPRESSION SPRINGS ARE DRAWN IN COMPRESSED STATE (CP), UNCOMPRESSED STATE IS APPROX 40% TO 60% LONGER THEN COMPRESSED STATE.
7. WHERE PREFERRED SCREW OR RIVETED CONNECTIONS CAN BE OMITTED AND PARTS CAN BE BONDED TOGETHER BY USING EITHER HIGH STRENGTH GLUE, EPOXY RESIN, OR SOLDER.
8. PARTS WHICH ARE DIRECTLY EXPOSED TO STEAM AND/OR WATER SHOULD BE CONSTRUCTED USING NON-FERROUS OR NON CORROSIVE MATERIAL SUCH AS BRASS, BRONZE, GUNMETAL, STAINLESS STEEL, COPPER OR MONEL.
9. THE ORDER IN WHICH THE PARTS/COMPONENTS ARE MANUFACTURED AND THE MODEL IS ASSEMBLED IS ENTIRELY LEFT TO THE BUILDER/MODEL MAKER.
10. A COLOUR SCHEME FOR THIS PROJECT IS ENTIRELY LEFT UP TO THE MODEL MAKER.
11. THE MANNER IN WHICH THE PARTS/COMPONENTS ARE MANUFACTURED IS ENTIRELY LEFT UP TO THE BUILDER.
12. USE LOCTITE, ON SCREW OR PRESS FIT CONNECTIONS OR SURFACES, WERE DEEMED NECESSARY TO PREVENT PARTS FROM LOOSENING.
13. WASHERS AND/OR SPRING WASHERS SHALL BE USED WHERE DEEMED NECESSARY.
14. REMOVE ALL SHARP EDGES
XX. ERRORS AND/OR OMISSIONS MAY OCCUR IN THE DRAWINGS, DO NOT HESITATE TO CONTACT ME SO THAT THE ERRORS/OMISSIONS CAN BE RECTIFIED.

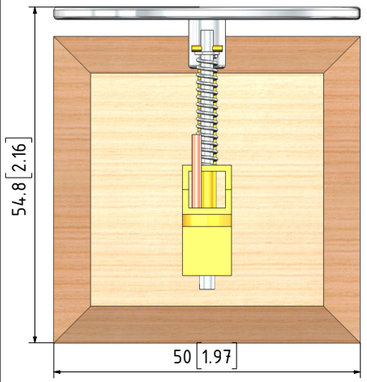


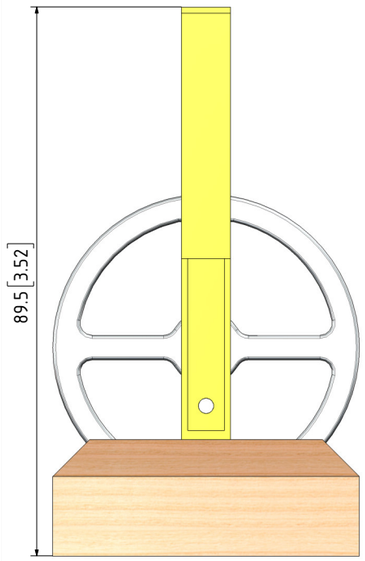


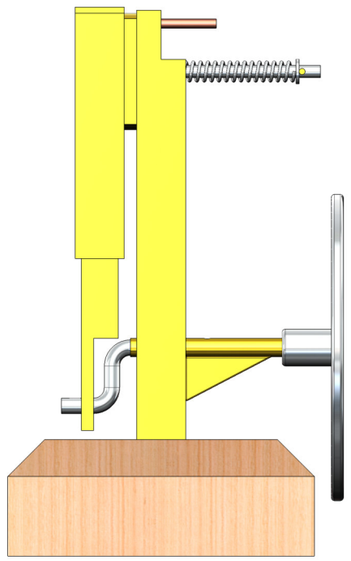

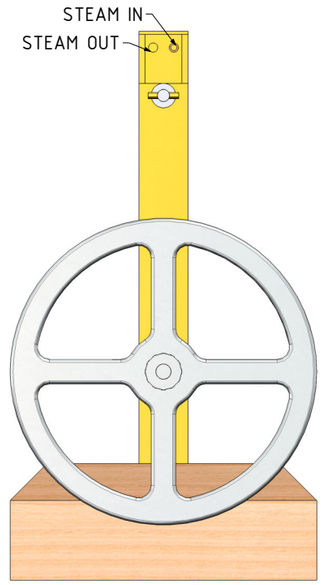


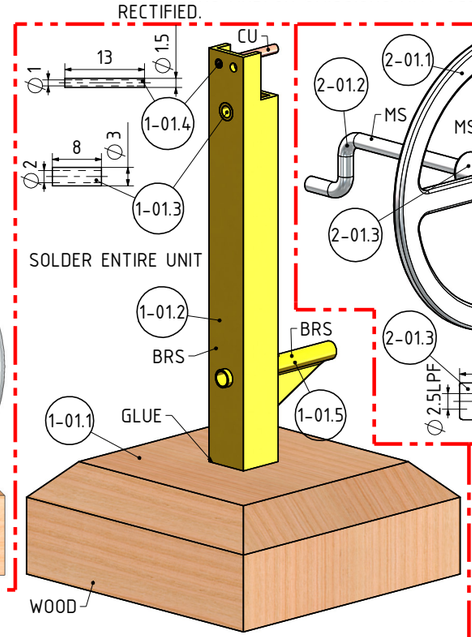


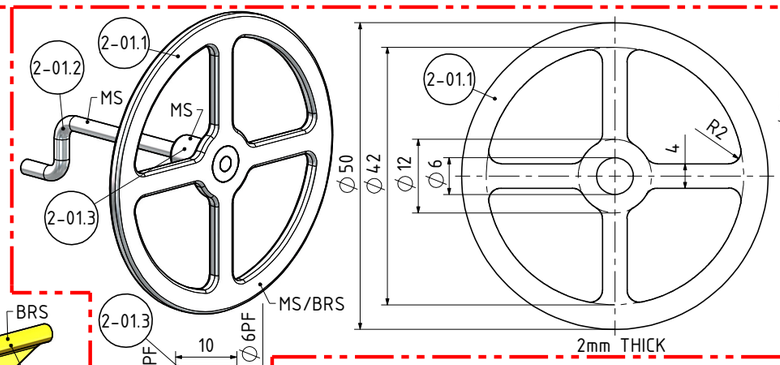


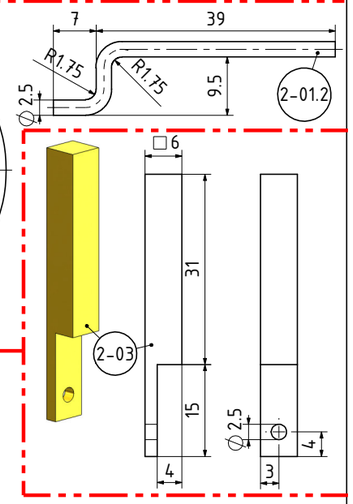


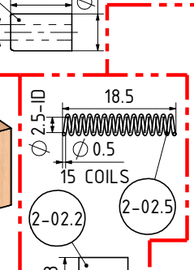


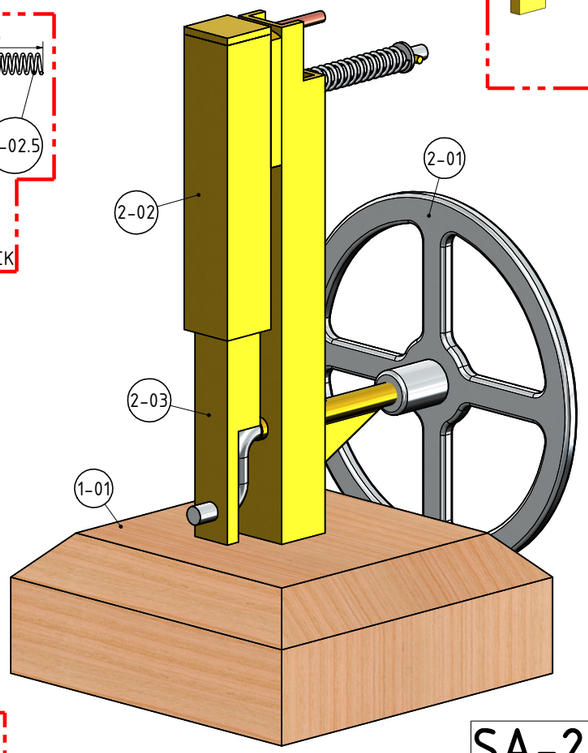


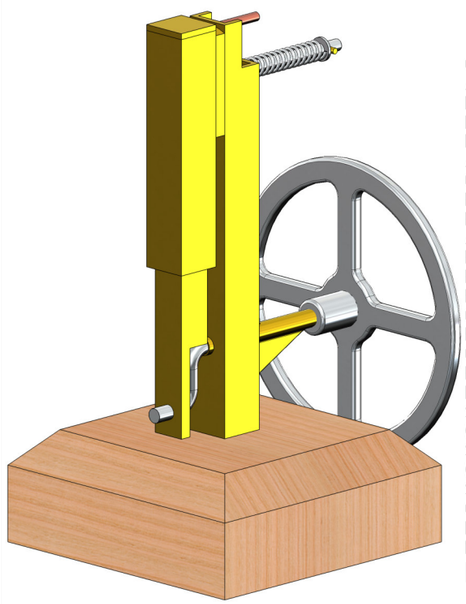

OTHER ABBREVIATIONS
AS = AS SHOWN
DP = DEEP
DAA= DRILL AFTER ASSEMBLY
D&TAA= DRILL AND TAP AFTER ASSEMBLY
CF = CLOSE FIT (SIZE FOR SIZE)
PF = PRESS FIT
PFAA= PRESS FIT AFTER ASSEMBLY
PCD = PITCH CIRCLE DIAMETER
RM = REAM
HEX = HEXACON, 6SIDED
CP = COMPRESSED
KNL = KNURLED
CSK = COUNTERSINK
PL = PLACES
DWL= DOWEL
SPF= SPOTFACE
(T)HESOP=(TAPPED)HOLES EQUALLY SPACED ON PCD
(T)HESOC=(TAPPED)HOLES EQUALLY SPACED ON CIRCUMFERENCE
OD = OUTSIDE DIAMETER
ID = INSIDE DIAMETER
MAX/MIN = CRITICAL DIMENSION
SA-xxx = SUB ASSEMBLY-xxx

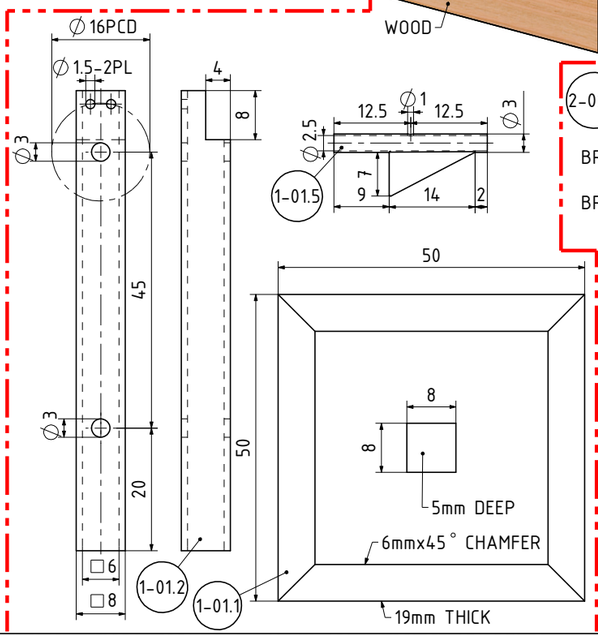


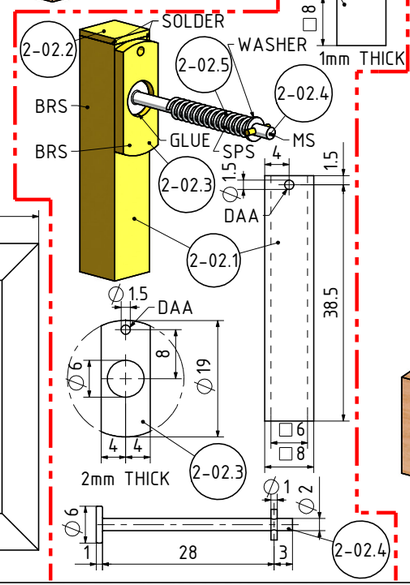


SA-2-205

NOTES: THE ORIGINAL DRAWINGS WERE GIVEN TO ME. THE ORIGNAL DESIGN AND ARTCLE WAS BY ANDREW SPRAGUE AND THE DRAWINGS BY G.R.BROAD. Jr MAGAZINE NOT SPECIFIED, ARTICLE TITLE "HAND-TOOL STEAM ENGINE"

TITLE
# 1 CYLINDER VERTICAL OSCILLATING STEAM ENGINE (BORE=6mm STROKE=19mm)

DRAWING CONTENTS
G.A., ISOMETRIC VIEW, NOTES, BOM, PARTS AND ASSEMBLIES

PROJECT No 09A-57-00


JDW DRAUGHTING SERVICES
J.A.M. DE WAAL. 12 BRIGHTWELL STREET PAPAKURA 2110. NEW ZEALAND. PHONE: 0064 09 2988815. MOB: 0211791000 E-MAIL: dewaal@xtra.co.nz.


PROJECTION JDWDS
DATE JANUARY 2025
MODEL SCALE: 1:1
DWG SCALE: 1:1 @A3 OR AS SHOWN
Copyright © J.A.M. DE WAAL PAPAKURA NZ
SHEET: 01 OF 01 A3 No:09A-57-00-SHT-01

DRAWINGS ARE FOR PERSONAL USE ONLY NOT FOR COMMERCIAL PURPOSES